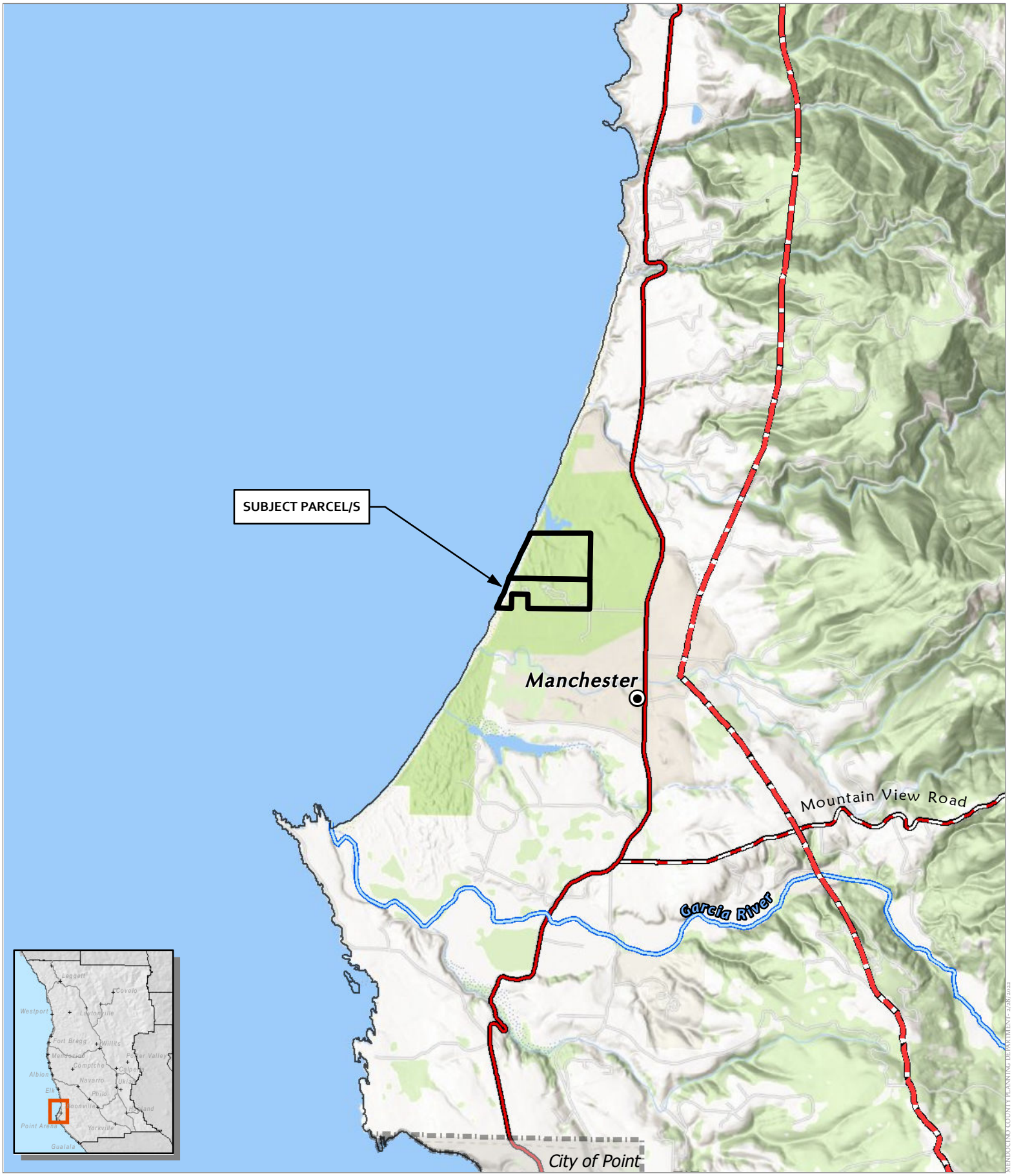

CASE: CDP 2022-0007
OWNER: State of California
APN: 133-010-03, 132-190-02
APLCT: Brian Dewey
AGENT: Joel Bonilla
ADDRESS: None, Manchester

Major Towns & Places
City Limits
Coastal Zone Boundary
Highways
Major Roads

0 2,550 5,100 Feet
0 0.5 1 Miles
1:63,360

LOCATION MAP

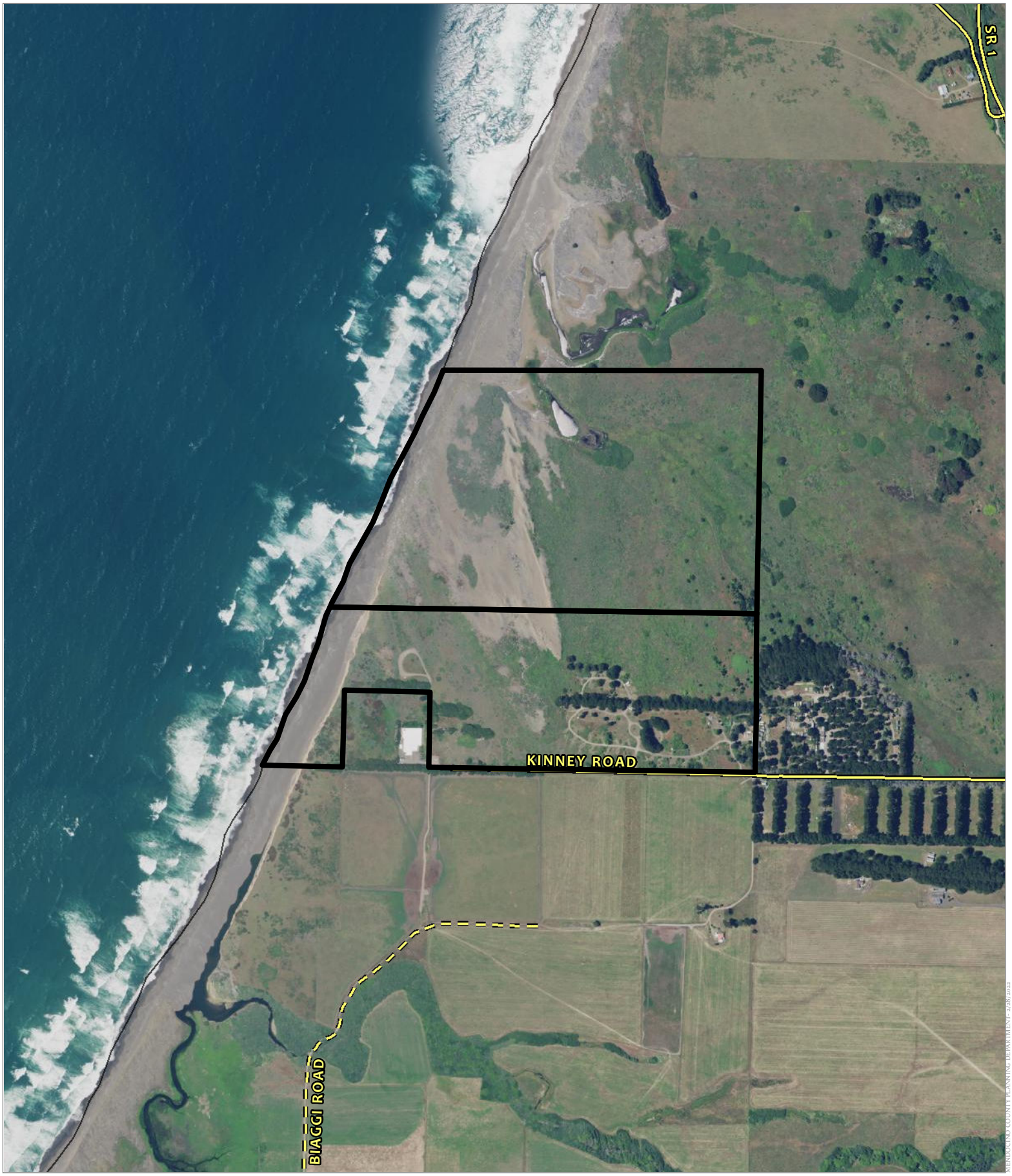

CASE: CDP 2022-0007
OWNER: State of California
APN: 133-010-03, 132-190-02
APLCT: Brian Dewey
AGENT: Joel Bonilla
ADDRESS: None, Manchester

Public Roads

Private Roads

0 500 1,000 Feet
0 0.075 0.15 Miles
1:12,000

AERIAL IMAGERY

MENDOCINO COUNTY PLANNING DEPARTMENT - 2/28/2023

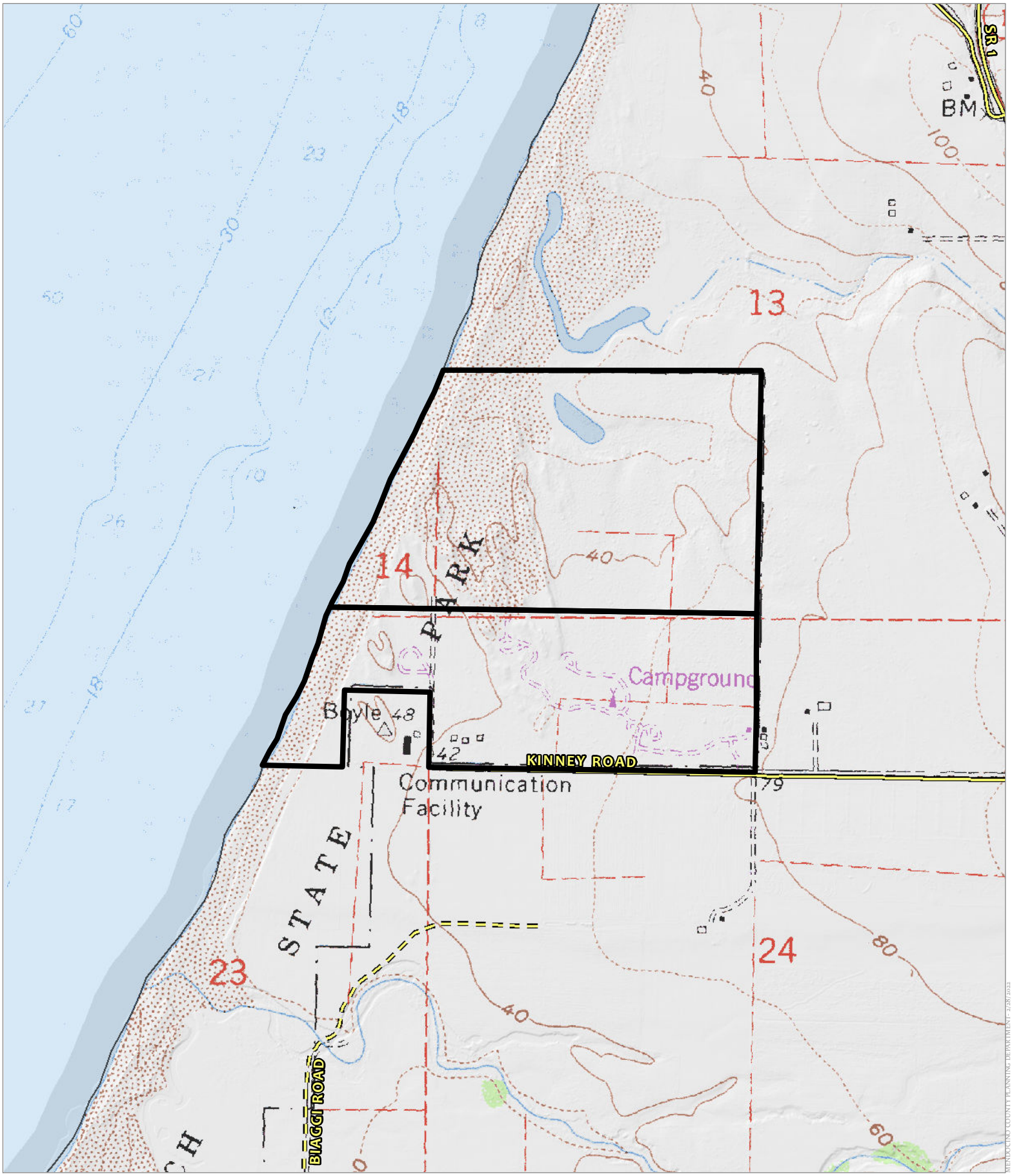

CASE: CDP 2022-0007
OWNER: State of California
APN: 133-010-03, 132-190-02
APLCT: Brian Dewey
AGENT: Joel Bonilla
ADDRESS: None, Manchester

Major Towns & Places

Public Roads

Private Roads

0 500 1,000 Feet
0 0.075 0.15 Miles
1:12,000

TOPOGRAPHIC MAP
CONTOUR INTERVAL IS 40 FEET

MENDOCINO COUNTY PLANNING DEPARTMENT - 2/28/2023

CONSTRUCTION DOCUMENTS

CALIFORNIA DEPARTMENT OF PARKS AND RECREATION
ACQUISITION AND DEVELOPMENT DIVISION
MANCHESTER STATE PARK
ACCESSIBILITY IMPROVEMENTS

VICINITY MAP

THIS PROJECT PROPOSES TO UPGRADE CAMPGROUND AND DAY USE FACILITIES TO DEPARTMENTAL ACCESSIBILITY STANDARDS. SPECIFIC UPGRADES INCLUDE:

- UPGRADE THREE (3) CAMPSITES TO ACCESSIBILITY STANDARDS
- IMPROVE ROUTES TO (E) BATHROOM BUILDINGS AND CAMPFIRE CENTER
- UPGRADE (E) GROUP CAMP AND PICNIC AREA (INCLUDE PARKING STALL)
- CONSTRUCT ACCESSIBLE PARKING AND UPGRADE TWO (2) DAY USE SITES AT THE BEACH PARKING AREA
- UPGRADE CAMPFIRE CENTER

PROJECT SCOPE

BUILDING CONSTRUCTION TYPE	NA
OCCUPANCY CLASSIFICATION	NA
NUMBER OF STORIES	NA
ACTUAL BUILDING HEIGHT	NA
BUILDING AREA IN SF	NA
FIRE SPRINKLED	NA
FIRE ALARM	NA
OTHER FIRE DETECTION SYSTEMS	NA
SMOKE CONTROL SYSTEM	NA
FIRE HAZARD SEVERITY ZONE:	NA
LANDUSE/ZONING:	PARK

CODE REVIEW

PROJECT ADDRESS:
12301 NORTH HIGHWAY 1
MENDOCINO, CA 95460
MENDOCINO COUNTY

DRAWING SHEET INDEX

SHEET	SHEET NO.
COVER SHEET	G-1
REFERENCE MAP	L-1
CAMPGROUND PLAN	L-2
GROUP CAMP PLAN	L-3
DAY USE PLAN	L-4
DETAILS	D-1
DETAILS	D-2
DETAILS	D-3

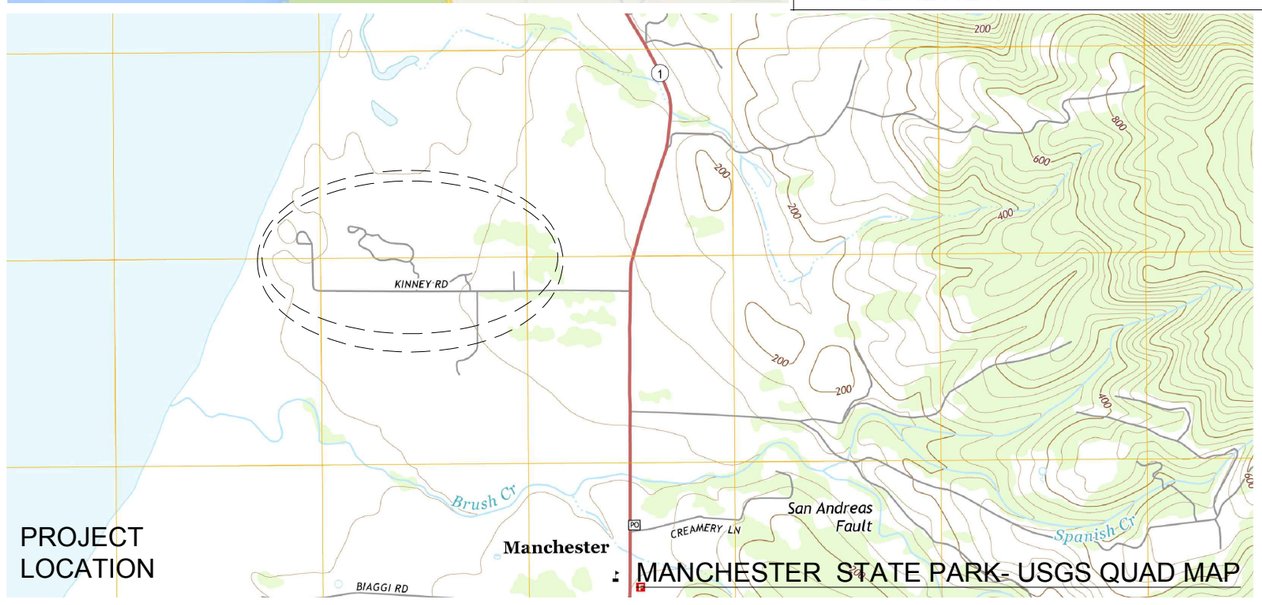

PROJECT LOCATION

: MANCHESTER STATE PARK- USGS QUAD MAP

1-ALL MATERIALS SHOWN OR NOTED ON THE PLANS ARE NEW UNLESS CALLED OUT OTHERWISE.

2-THE CONTRACTOR SHALL VISIT THE SITE AND VERIFY ALL EXISTING CONDITIONS SHOWN OR DIMENSIONED HERE. ANY DISCREPANCIES SHALL BE BROUGHT TO THE ATTENTION OF THE STATE REPRESENTATIVE FOR RESOLUTION BEFORE PROCEEDING WITH THAT PORTION OF THE WORK.

3-ALL WORK SHALL COMPLY WITH THE CURRENT EDITION OF THE FOLLOWING LISTED CODES, AND ALL OTHERS HAVING JURISDICTION OVER THE WORK.
2013 EDITION OF THE CALIFORNIA BUILDING CODE.
2013 EDITION OF THE CALIFORNIA FIRE CODE.
2013 EDITION OF THE CALIFORNIA ENERGY CODE.
2013 EDITION OF THE CALIFORNIA ELECTRICAL CODE.
2013 EDITION OF THE CALIFORNIA PLUMBING CODE.
2013 EDITION OF THE CALIFORNIA MECHANICAL CODE.
2013 EDITION OF THE CALIFORNIA GREEN BUILDING STANDARDS CODE.
2010 ADA STANDARDS FOR ACCESSIBLE DESIGN

4-CONDUCT ALL WORK IN ACCORDANCE WITH THE LATEST SAFETY RULES AND REGULATIONS OF ALL AUTHORITIES AND AGENCIES HAVING JURISDICTION OVER THE WORK.

5-ALL WORK SHALL BE IN ACCORDANCE WITH THE CONSTRUCTION DOCUMENTS. WHERE DETAILED INFORMATION OR CLARIFICATION IS REQUIRED, THE MATTER SHALL BE REFERRED TO THE STATE REPRESENTATIVE FOR WRITTEN RESOLUTION.

6-THE CONTRACTOR SHALL NOT SCALE THE DRAWINGS, BUT SHALL RELY ONLY ON THE WRITTEN DIMENSIONS GIVEN. IF A DISCREPANCY OCCURS OR NO DIMENSION IS GIVEN, THE CONTRACTOR SHALL NOTIFY THE STATE REPRESENTATIVE FOR WRITTEN CLARIFICATION BEFORE PROCEEDING WITH THAT PORTION OF THE WORK.

GENERAL NOTES

ACQUISITION & DEVELOPMENT DIVISION
One Capitol Mall
Sacramento, CA
95814-3229

LICENSED LANDSCAPE ARCHITECT
Steven Nawrath
No. 4562
Signature
6-30-18
Renewal Date
01-04-17
Date
STATE OF CALIFORNIA

CALIFORNIA STATE FIRE MARSHAL- APPROVED

Approval of this plan does not authorize or approve any omission of deviation from applicable regulations. Final approval is subject to field inspection. One set of approved plans shall be available on the project site at all times.

Reviewed by Date

DPR ACCESS COMPLIANCE REVIEW ACCESSIBILITY SECTION
CERTIFICATION #

Reviewed by Date

ACCESSIBILITY COMPLIANCE AND STATE FIRE MARSHAL SIGNED ORIGINALS ARE ON FILE AT THE DEPARTMENT OF PARKS AND RECREATION, NORTHERN SERVICE CENTER

DESIGNED: NAWRATH
DRAWN: NAWRATH
CHECKED: KLITH
DATE: 1-4-2017

REVISIONS
△ DATE

MANCHESTER STATE PARK
ACCESSIBILITY IMPROVEMENTS

COVER SHEET

DRAWING NO.
XXXXX.XXX

SHEET NO.
G-1
1 OF 8

File: G:\Accessibility\Trails\14-15 Trail Projects\Manchester SP- Beach Trail\Design\G-1 COVER SHEET MANCHESTER SP ACCESSIBILITY IMPROVEMENTS.dwg Layout: G-01 COVERSHEET Date: January 05 2017 - 9:32 am User: snawrath

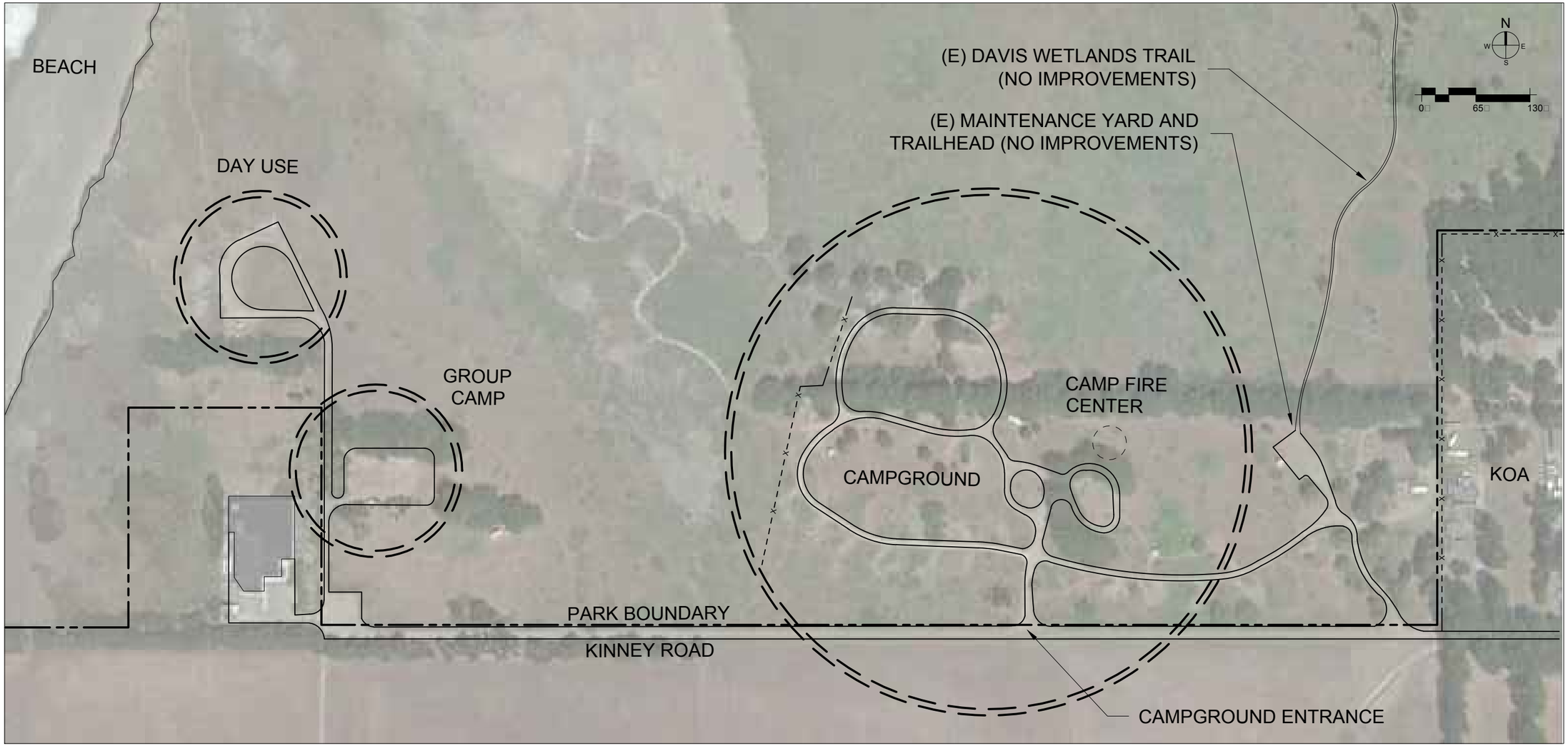

MANCHESTER STATE PARK ACCESSIBILITY IMPROVEMENTS

GENERAL CONSTRUCTION NOTES:

- ALL ACCESSIBLE SURFACES SHALL NOT EXCEED 2
- RUNNING SLOPES ON PATHWAYS SHALL NOT EXCEED 5
- NO VEGETATION SHALL RE REMOVED WITHOUT PRIOR APPROVAL FROM STATE'S BIOLOGIST
- A STATE BIOLOGIST TRAINED TO IDENTIFY POINT ARENA MOUNTAIN BEAVER (PAMB) HABITAT SHALL SURVEY WITHIN 100 OF, AND ON ALL PROPOSED IMPROVEMENT AREAS PRIOR TO COMMENCING CONSTRUCTION. IF BURROWS ARE LOCATED WITHIN 100 OF PROPOSED IMPROVEMENT AREA, THE STATE BIOLOGIST SHALL PROVIDE PROJECT MANGER WITH APPROPRIATE CONDITIONS FOR AVOIDING IMPACTS

ACQUISITION &
DEVELOPMENT DIVISION
One Capitol Mall
Sacramento, CA
95814-3229

CALIFORNIA STATE FIRE MARSHAL- APPROVED

Approval of this plan does not authorize or approve any omission of deviation from applicable regulations. Final approval is subject to field inspection. One set of approved plans shall be available on the project site at all times.

Reviewed by Date

DPR ACCESS COMPLIANCE REVIEW
ACCESSIBILITY SECTION
CERTIFICATION # APPROVED

Reviewed by SN Date 10-28-14

ACCESSIBILITY COMPLIANCE AND STATE FIRE MARSHAL SIGNED ORIGINALS ARE ON FILE AT THE DEPARTMENT OF PARKS AND RECREATION, NORTHERN SERVICE CENTER

DESIGNED:	S. NAWRATH
DRAWN:	S.NAWRATH
CHECKED:	XXXX
DATE:	2-18-2016

REVISIONS

	DATE

MANCHESTER STATE PARK
REFERENCE MAP

ACCESSIBILITY IMPROVEMENTS

DRAWING NO.
XXXXX.001

SHEET NO.
L-1

File: G:\Accessibility\Trails\14-15 Trail Projects\Manchester SP - Beach Trail\Design\Concept Sheets Manchester SP.dwg Layout: L-1 Reference Map Date: September 12 2016 - 2:02 pm User: snawrath

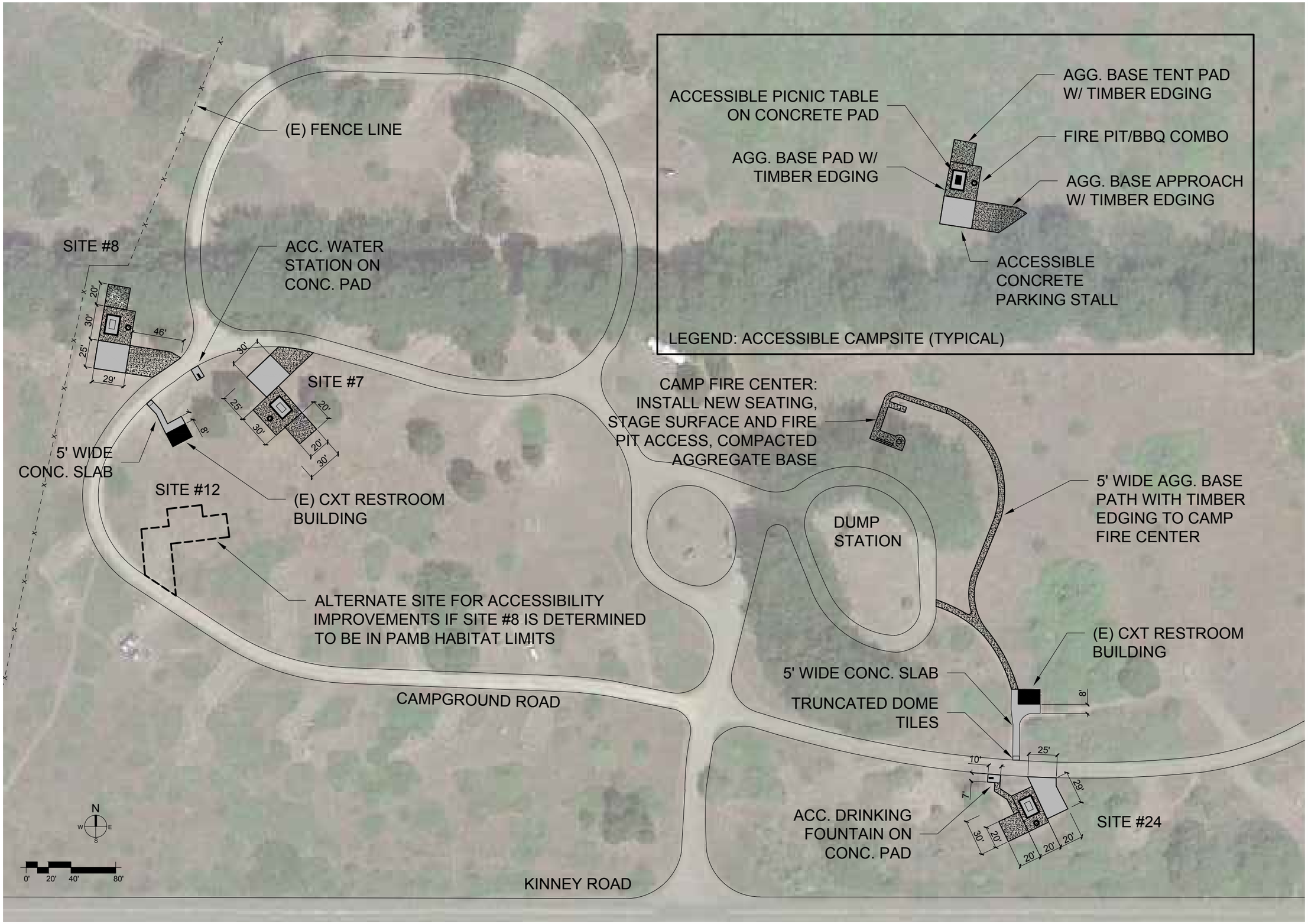

File: G:\Accessibility\Trails\14-15 Trail Projects\Manchester SP- Beach Trail\Design\Concept Sheets Manchester SP.dwg Layout: L-2 Campground Date: January 04 2017 - 8:43 am User: snawrath

CALIFORNIA STATE PARKS SINCE 1864

ACQUISITION & DEVELOPMENT DIVISION
One Capitol Mall
Sacramento, CA
95814-3229

CALIFORNIA STATE FIRE MARSHAL- APPROVED

Approval of this plan does not authorize or approve any omission of deviation from applicable regulations. Final approval is subject to field inspection. One set of approved plans shall be available on the project site at all times.

Reviewed by Date

DPR ACCESS COMPLIANCE REVIEW
ACCESSIBILITY SECTION
CERTIFICATION #

Reviewed by SN Date 10-28-14

ACCESSIBILITY COMPLIANCE AND STATE FIRE MARSHAL SIGNED ORIGINALS ARE ON FILE AT THE DEPARTMENT OF PARKS AND RECREATION, NORTHERN SERVICE CENTER

DESIGNED:	S. NAWRATH
DRAWN:	S.NAWRATH
CHECKED:	XXXX
DATE:	2-16-2016

REVISIONS	
	DATE

MANCHESTER STATE PARK
CAMPGROUND

ACCESSIBILITY IMPROVEMENTS

DRAWING NO.
XXXXX.001

SHEET NO.
L-2

3 OF 8

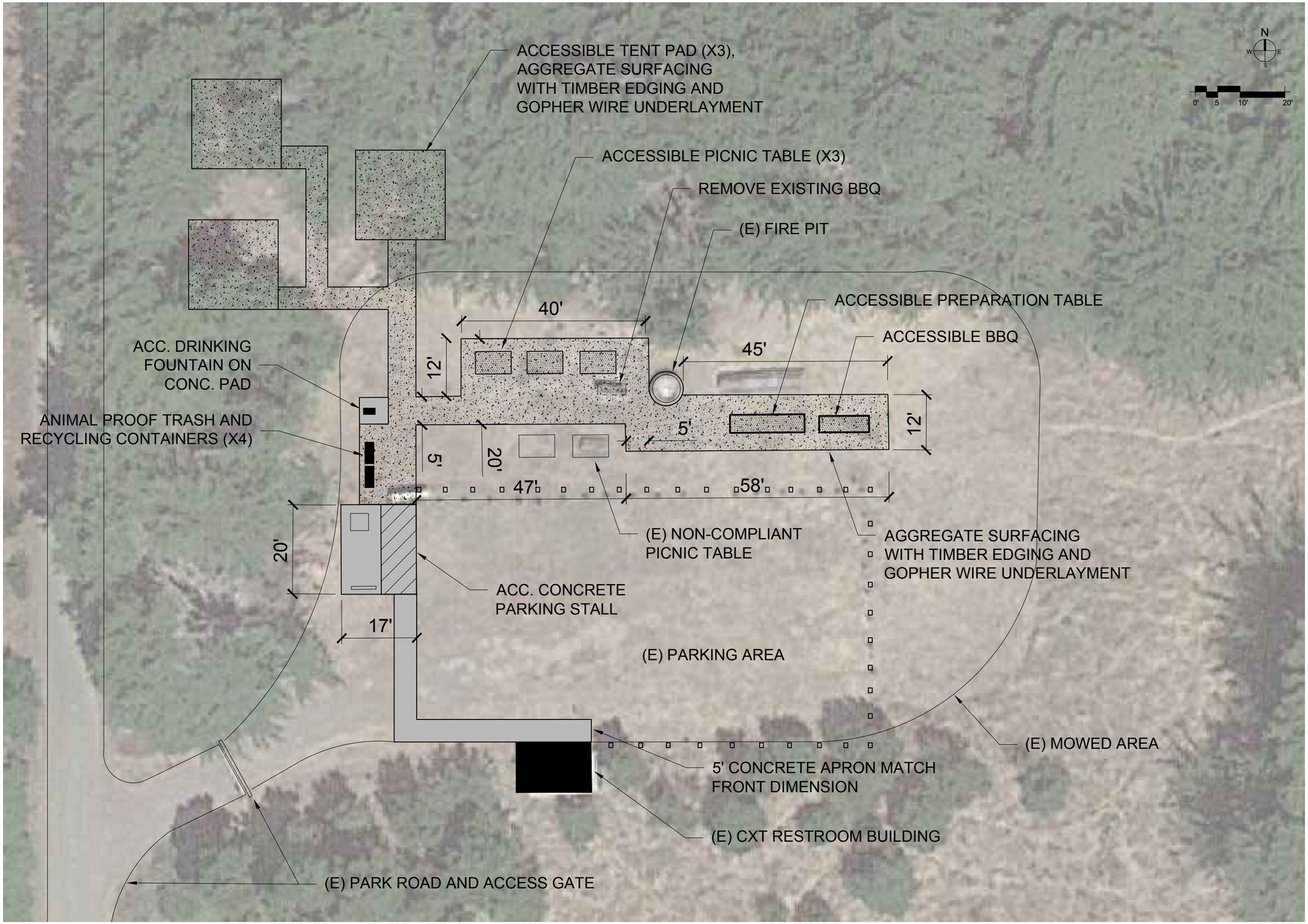

ACQUISITION & DEVELOPMENT DIVISION
One Capitol Mall
Sacramento, CA
95814-3229

CALIFORNIA STATE FIRE MARSHAL- APPROVED

Approval of this plan does not authorize or approve any omission of deviation from applicable regulations. Final approval is subject to field inspection. One set of approved plans shall be available on the project site at all times.

Reviewed by Date

DPR ACCESS COMPLIANCE REVIEW
ACCESSIBILITY SECTION
CERTIFICATION # APPROVED

Reviewed by SN Date 10-28-14

ACCESSIBILITY COMPLIANCE AND STATE FIRE MARSHAL SIGNED ORIGINALS ARE ON FILE AT THE DEPARTMENT OF PARKS AND RECREATION, NORTHERN SERVICE CENTER

DESIGNED:	S. NAWRATH
DRAWN:	S.NAWRATH
CHECKED:	XXXX
DATE:	2-18-2016

REVISIONS	
	DATE

MANCHESTER STATE PARK
GROUP CAMP

ACCESSIBILITY IMPROVEMENTS

DRAWING NO.
XXXXX.001

SHEET NO.
L-3

4 OF 8

File: G:\Accessibility\Trails\14-15 Trail Projects\Manchester SP- Beach Trail\Design\Concept Sheets Manchester SP.dwg Layout: L-3 Group Camp Date: December 15 2016 - 3:19 pm User: snawrath

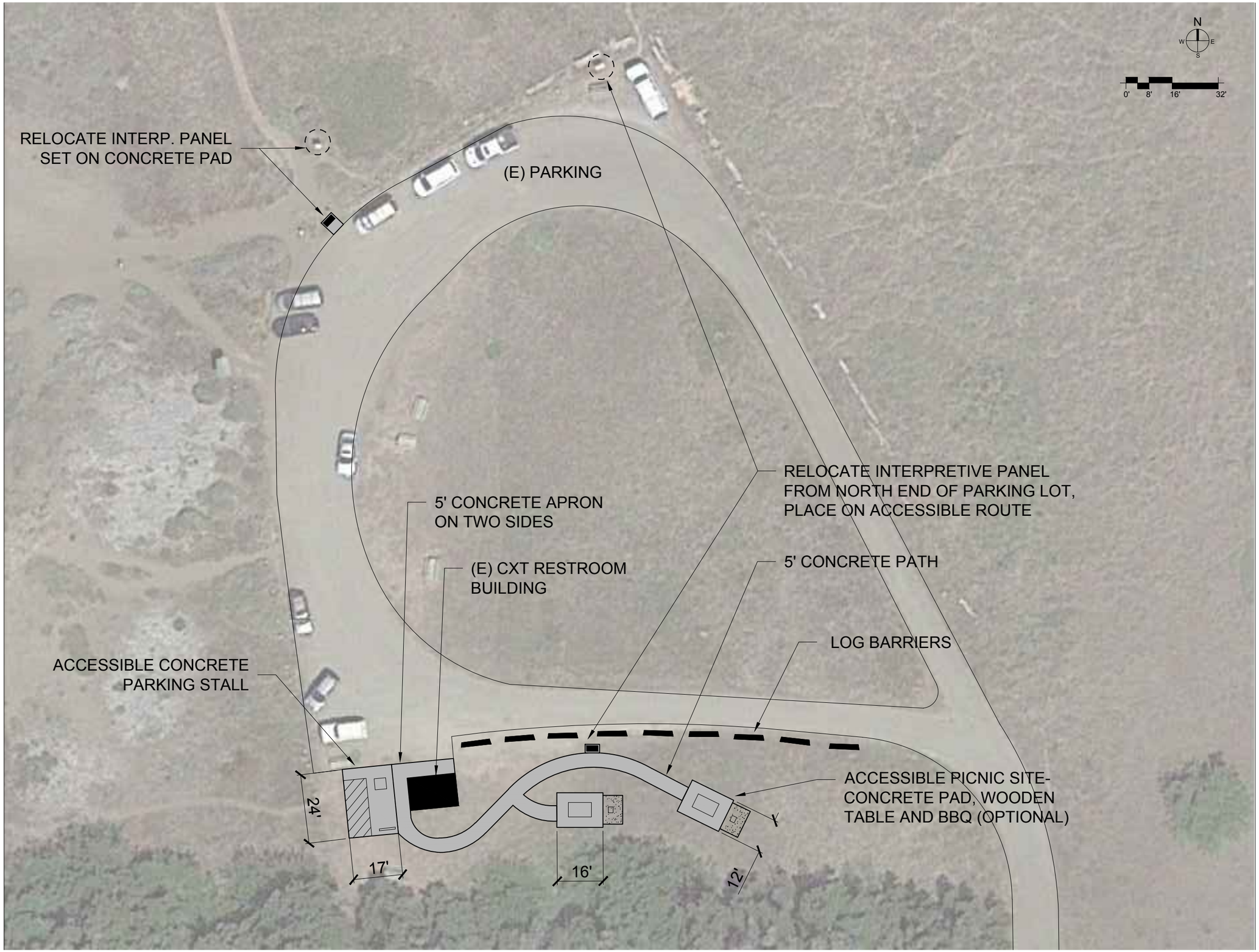

CALIFORNIA STATE PARKS
SINCE 1864

ACQUISITION &
DEVELOPMENT DIVISION
One Capitol Mall
Sacramento, CA
95814-3229

CALIFORNIA STATE FIRE MARSHAL- APPROVED

Approval of this plan does not authorize or approve any omission of deviation from applicable regulations. Final approval is subject to field inspection. One set of approved plans shall be available on the project site at all times.

Reviewed by Date

DPR ACCESS COMPLIANCE REVIEW
ACCESSIBILITY SECTION
CERTIFICATION # APPROVED

Reviewed by SN Date 10-28-14

ACCESSIBILITY COMPLIANCE AND STATE FIRE MARSHAL SIGNED ORIGINALS ARE ON FILE AT THE DEPARTMENT OF PARKS AND RECREATION, NORTHERN SERVICE CENTER

DESIGNED:	S. NAWRATH
DRAWN:	S.NAWRATH
CHECKED:	XXXX
DATE:	2-16-2016

REVISIONS

	DATE

MANCHESTER STATE PARK
DAY USE

ACCESSIBILITY IMPROVEMENTS

DRAWING NO.
XXXXX.001

SHEET NO.
L-4

File: G:\Accessibility\Trails\14-15 Trail Projects\Manchester SP- Beach Trail\Design\Concept Sheets Manchester SP.dwg Layout: L-4 Day Use Date: December 15, 2016 - 3:32 pm User: snawrath

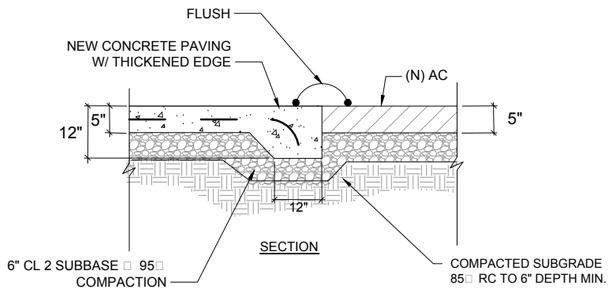

1 CONCRETE TO ASPHALT- TYPICAL

NOT TO SCALE

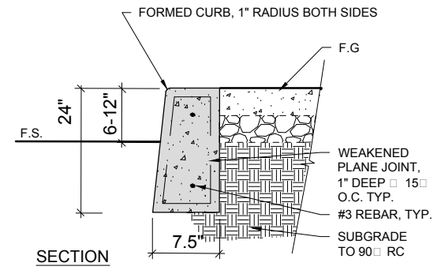

NOTES: - PLACE EXPANSION JOINT @ 10' O.C. TYP. ON ALL CURBS
- 45 DEG. TAPER AT DECK ABUTMENTS

2 CONCRETE CURB

NOT TO SCALE

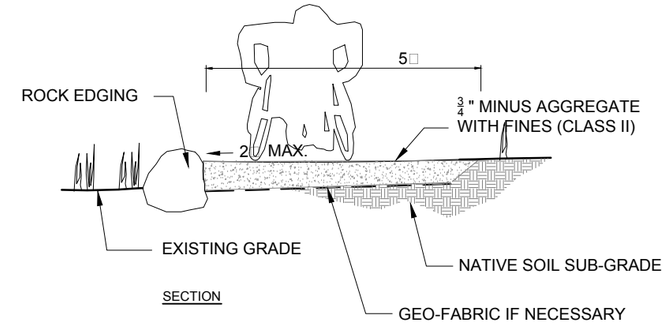

3 SINGLE TIER ROCK WALL- TYPICAL
CROSS SLOPE CONDITION

NOT TO SCALE

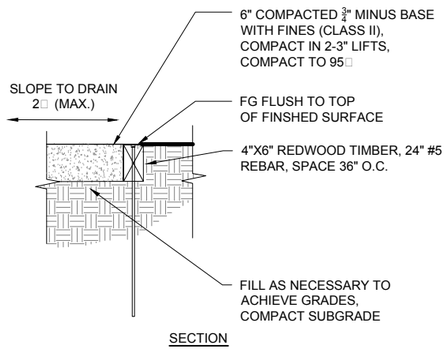

4 COMPACTED AGGREGATE PAVING - TYPICAL
TIMBER EDGING

NOT TO SCALE

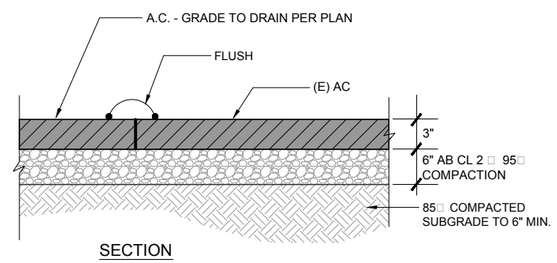

5 ASPHALT PAVING- TYPICAL

NOT TO SCALE

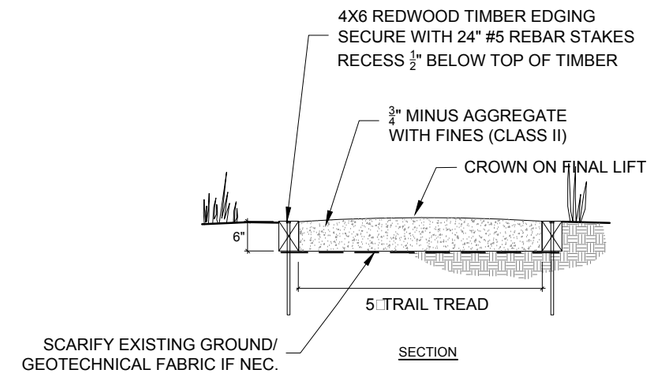

6 TIMBER EDGED TURNPIKE - TYPICAL

NOT TO SCALE

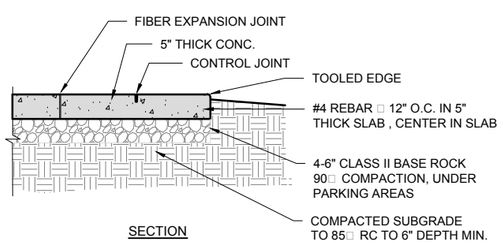

NOTES:
- CONCRETE NOT TO EXCEED 1.5□ CROSS SLOPE, UNLESS OTHERWISE NOTED ON PLAN
- EXPANSION JOINTS TRAIL: FIBER EXPANSION JOINTS 20□MAX., FULL DEPTH/TOOLED OR SAW CUT CONTROL JOINTS 10□MAX. 1.5" DEEP CONCRETE . SLAB: FIBER EXPANSION JOINTS 20□MAX. CONTROL JOINTS 10□MA.X AS NEEDED TO ELIMINATE CRACKING, FINAL JOINT LAYOUT TO BE LAID OUT BY CONTRACTOR AND APPROVED BY STATES REPRESENTATIVE

7 CONCRETE SLAB - TYPICAL

NOT TO SCALE

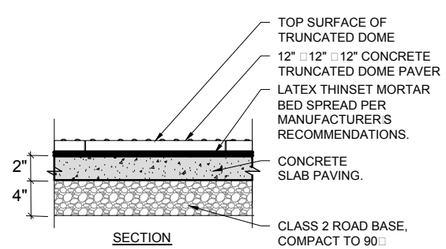

NOTES:
1. CONCRETE SLAB SHALL BE SLOPED TO PROVIDE COMPLETE SURFACE DRAINAGE.
2. SEE SPECIFICATION FOR CONCRETE PAVING FINISH
3. EXPANSION JOINTS ARE MANDATORY. SEE DRAWINGS FOR LOCATIONS.
4. SWEEP JOINTS WITH SAND OR GROUT.
5. TRUNCATED DOME PAVER TO BE WAUSAU DOME TILE/ADA-50 OR EQUAL
6. TRUNCATED DOME PAVER SHALL MEET FLUSH WITH ADJACENT FINISHED SURFACE.

8 TRUNCATED DOME PAVER

NOT TO SCALE

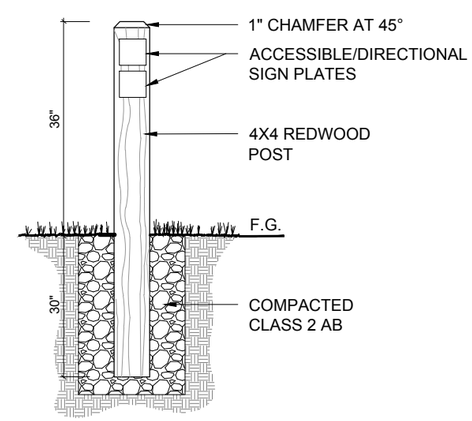

9 DIRECTIONAL SIGN - TYPICAL

NOT TO SCALE

ACQUISITION &
DEVELOPMENT DIVISION
One Capitol Mall
Sacramento, CA
95814-3229

CALIFORNIA STATE FIRE MARSHAL- APPROVED

Approval of this plan does not authorize or approve any omission of deviation from applicable regulations. Final approval is subject to field inspection. One set of approved plans shall be available on the project site at all times.

Reviewed by Date

DPR ACCESS COMPLIANCE REVIEW
ACCESSIBILITY SECTION
CERTIFICATION # NA

Reviewed by NA Date NA

ACCESSIBILITY COMPLIANCE AND STATE FIRE MARSHAL SIGNED ORIGINALS ARE ON FILE AT THE DEPARTMENT OF PARKS AND RECREATION, NORTHERN SERVICE CENTER

DES:	S. NAWRATH
DRAWN:	S. NAWRATH
CHECKED:	D. KLITH
DATE:	02-23-16

REVISIONS	
	DATE

MANCHESTER STATE PARK
ACCESSIBILITY IMPROVEMENTS

CONSTUCTION DETAILS

DRAWING NO.
XXXXX.XXX

SHEET NO.
D-1

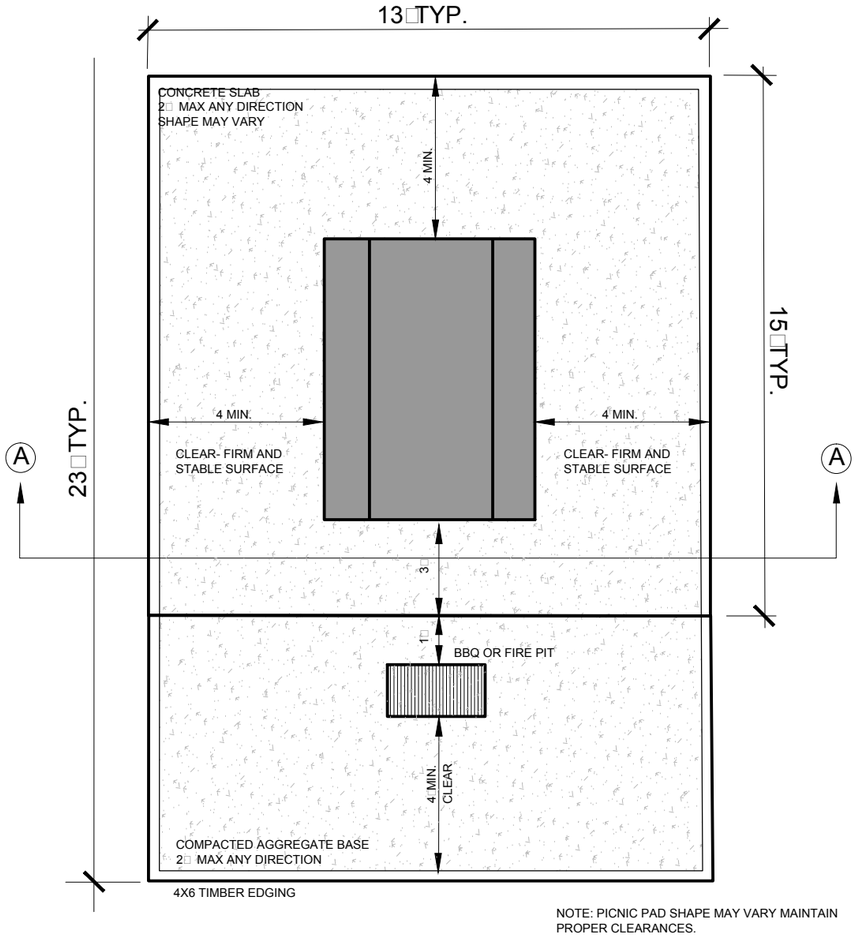

NOTE: PICNIC PAD SHAPE MAY VARY MAINTAIN PROPER CLEARANCES.

PLAN

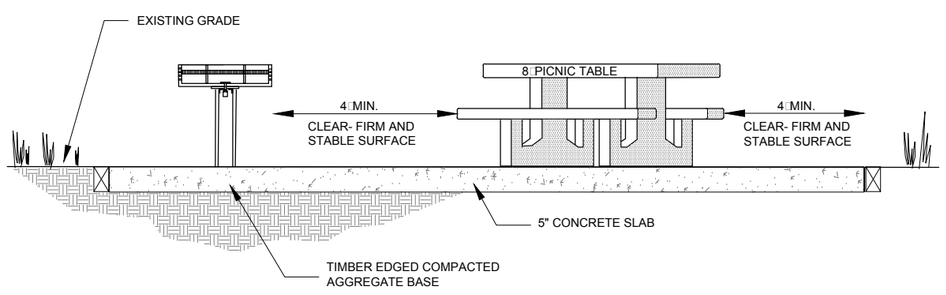

SECTION A-A

1 ACCESSIBLE PICNIC SITE TYP.

NOT TO SCALE

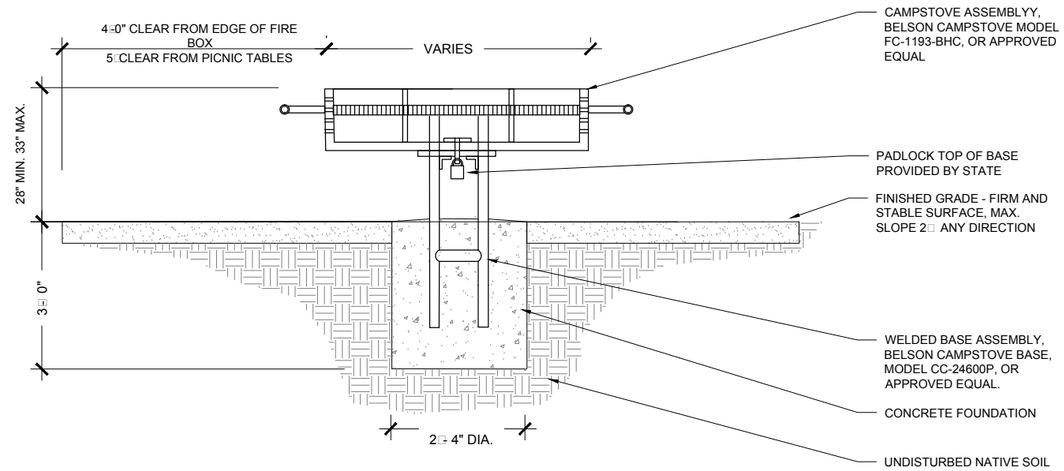

2 ACCESSIBLE BBQ

NOT TO SCALE

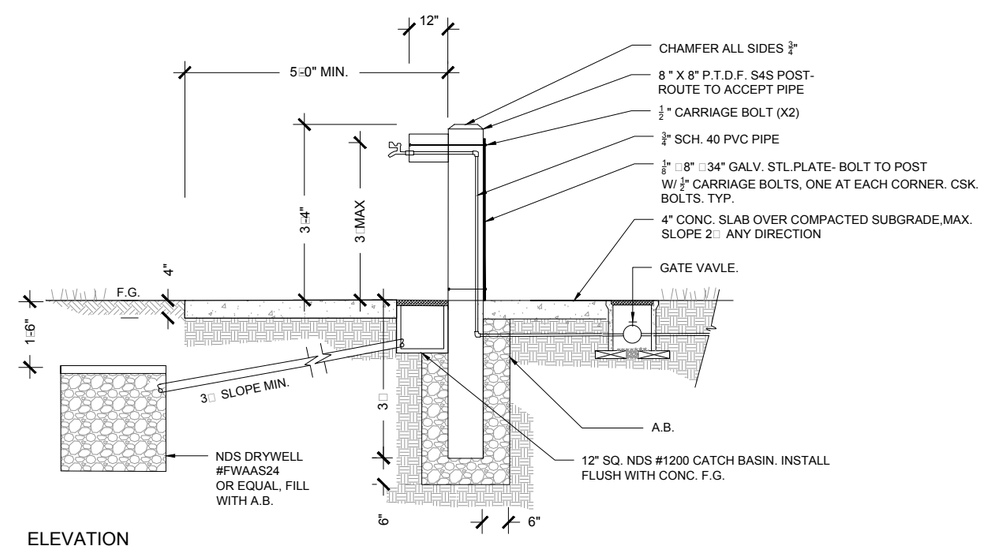

ELEVATION

3 ACCESSIBLE WATER STATION

NOT TO SCALE

ACQUISITION & DEVELOPMENT DIVISION
One Capitol Mall
Sacramento, CA
95814-3229

CALIFORNIA STATE FIRE MARSHAL- APPROVED

Approval of this plan does not authorize or approve any omission of deviation from applicable regulations. Final approval is subject to field inspection. One set of approved plans shall be available on the project site at all times.

Reviewed by Date

DPR ACCESS COMPLIANCE REVIEW
ACCESSIBILITY SECTION
CERTIFICATION # NA

Reviewed by NA Date NA

ACCESSIBILITY COMPLIANCE AND STATE FIRE MARSHAL SIGNED ORIGINALS ARE ON FILE AT THE DEPARTMENT OF PARKS AND RECREATION, NORTHERN SERVICE CENTER

DES:	S. NAWRATH
DRAWN:	S. NAWRATH
CHECKED:	D. KLITH
DATE: 02-23-16	

REVISIONS

	DATE

MANCHESTER STATE PARK
ACCESSIBILITY IMPROVEMENTS

CONSTUCTION DETAILS

DRAWING NO.
XXXXX.XXX

SHEET NO.
D-2

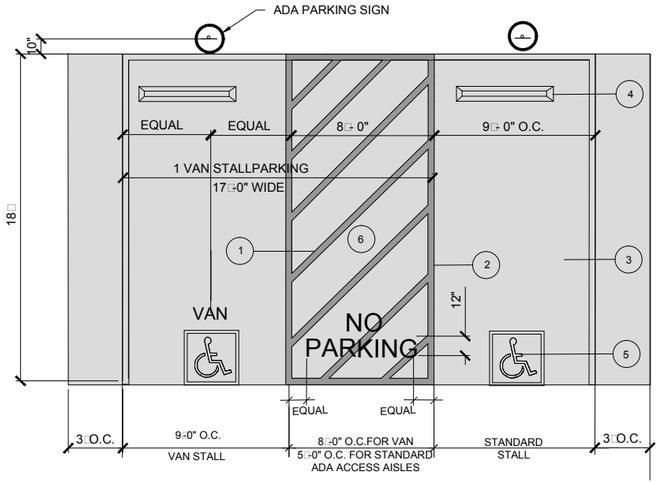

NOTES:

1. 4" WIDE PAINTED WHITE LINES, TYPICAL. 45 DEGREE LINES SHALL BE 36" ON CENTER. "NO PARKING" TEXT SHALL BE HELVETICA NARROW FONT STYLE, WHITE LETTERING AT 12" TALL. CENTER TEXT AS DIAGRAMMED
2. PERIMETER OF ACCESS AISLE TO BE BLUE 4" WIDE LINE.
3. ADA PARKING PAD TO BE 4" CONCRETE SLAB
4. INSTALL WHEEL STOPS PER DETAIL
5. INSTALL ADA SYMBOL PER DETAIL
6. ACCESSIBLE PARKING STALLS AND AISLEWAY NOT EXCEED 1.5' SLOPE IN ANY DIRECTION

SYMBOL SIZE

3'-3' PARKING STALL.

1 ACCESSIBLE PARKING DOUBLE STALL

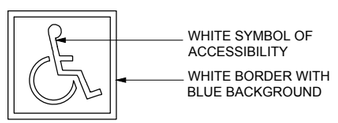

NOTE:

LOCATE SYMBOL AT REAR LIMIT OF PARKING STALL

2 ADA SYMBOL

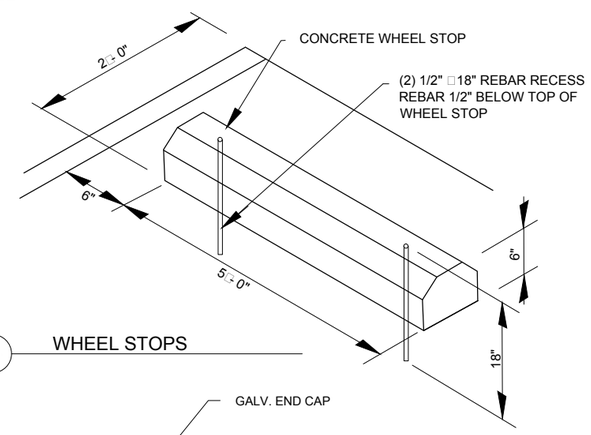

4 WHEEL STOPS

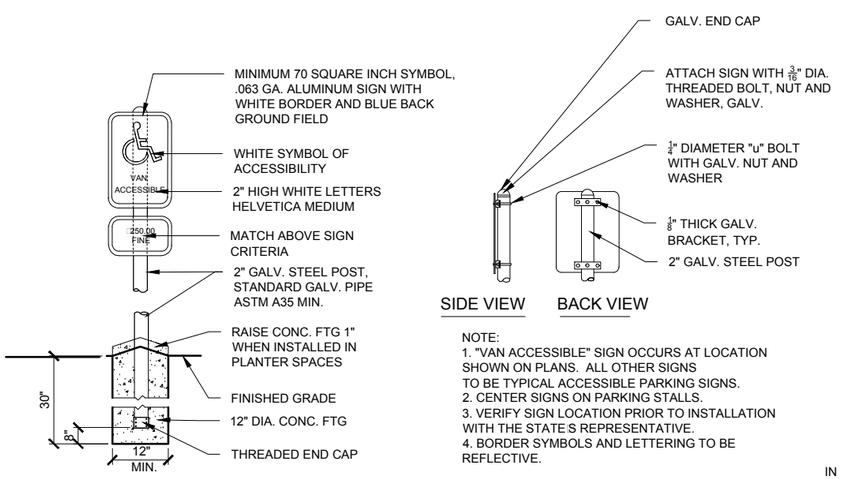

NOTE:

1. "VAN ACCESSIBLE" SIGN OCCURS AT LOCATION SHOWN ON PLANS. ALL OTHER SIGNS TO BE TYPICAL ACCESSIBLE PARKING SIGNS.
2. CENTER SIGNS ON PARKING STALLS.
3. VERIFY SIGN LOCATION PRIOR TO INSTALLATION WITH THE STATE'S REPRESENTATIVE.
4. BORDER SYMBOLS AND LETTERING TO BE REFLECTIVE.

IN LANDSCAPED AREAS: SET SIGN ELEVATION 5'-5" CLEAR FROM PARKING STALL FINISHED SURFACE GRADE TO BOTTOM OF SIGN. IN PEDESTRIAN CIRCULATION ROUTES: SET SIGN ELEVATION 85" FROM PARKING STALL TO BOTTOM OF SIGN.

3 ACCESSIBLE PARKING SIGN

CONCRETE ACCESSIBLE PARKING (TYPICAL)

NOT TO SCALE

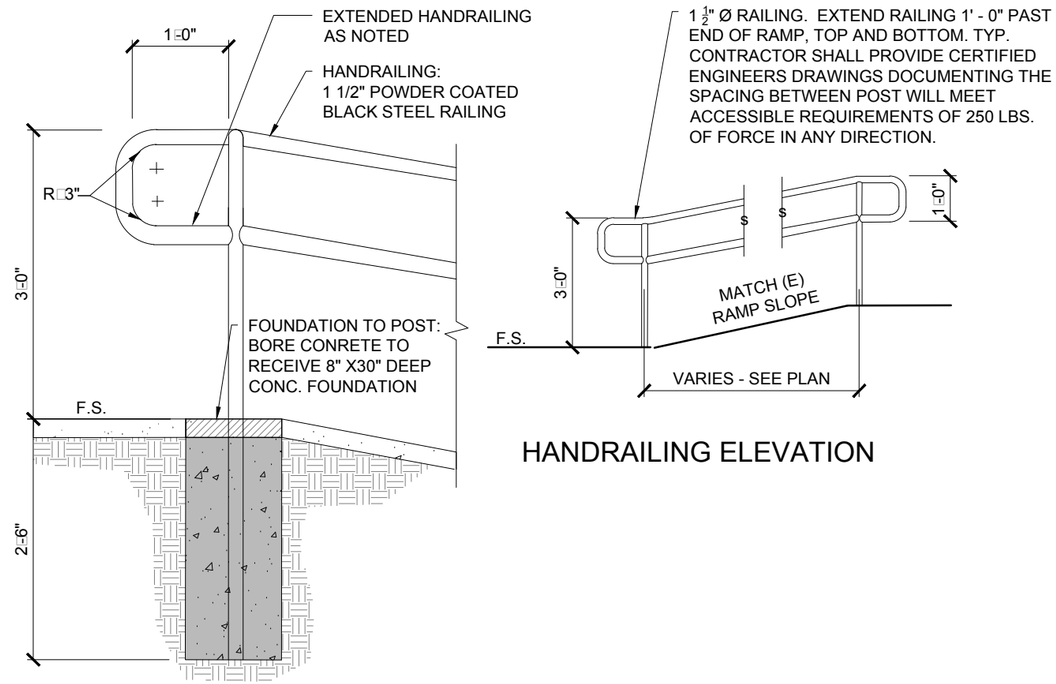

HANDRAILING ELEVATION

STEEL PIPE HANDRAIL (TYPICAL)

NOT TO SCALE

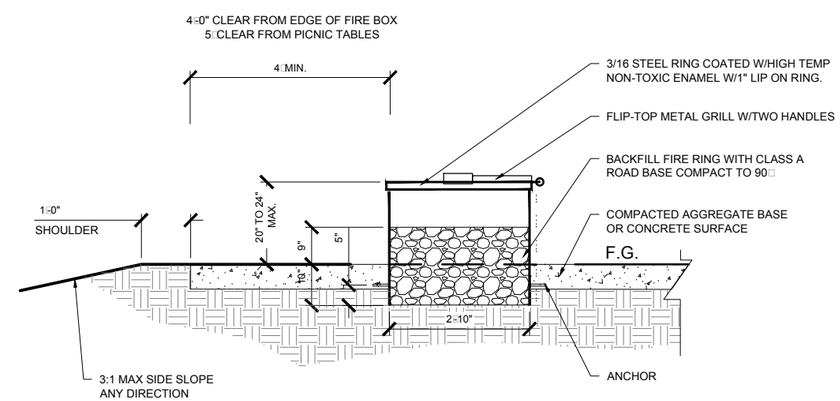

ELEVATION

ACCESSIBLE FIRE PIT (TYPICAL)

NOT TO SCALE

CALIFORNIA STATE PARKS SINCE 1864

ACQUISITION & DEVELOPMENT DIVISION
One Capitol Mall
Sacramento, CA
95814-3229

CALIFORNIA STATE FIRE MARSHAL- APPROVED

Approval of this plan does not authorize or approve any omission of deviation from applicable regulations. Final approval is subject to field inspection. One set of approved plans shall be available on the project site at all times.

Reviewed by Date

DPR ACCESS COMPLIANCE REVIEW ACCESSIBILITY SECTION

CERTIFICATION # NA

Reviewed by NA Date NA

ACCESSIBILITY COMPLIANCE AND STATE FIRE MARSHAL SIGNED ORIGINALS ARE ON FILE AT THE DEPARTMENT OF PARKS AND RECREATION, NORTHERN SERVICE CENTER

DES:	S. NAWRATH
DRAWN:	S. NAWRATH
CHECKED:	D. KLITH
DATE: 02-23-16	

REVISIONS

	DATE

MANCHESTER STATE PARK
ACCESSIBILITY IMPROVEMENTS

CONSTUCTION DETAILS

DRAWING NO.
XXXXX.XXX

SHEET NO.
D-3

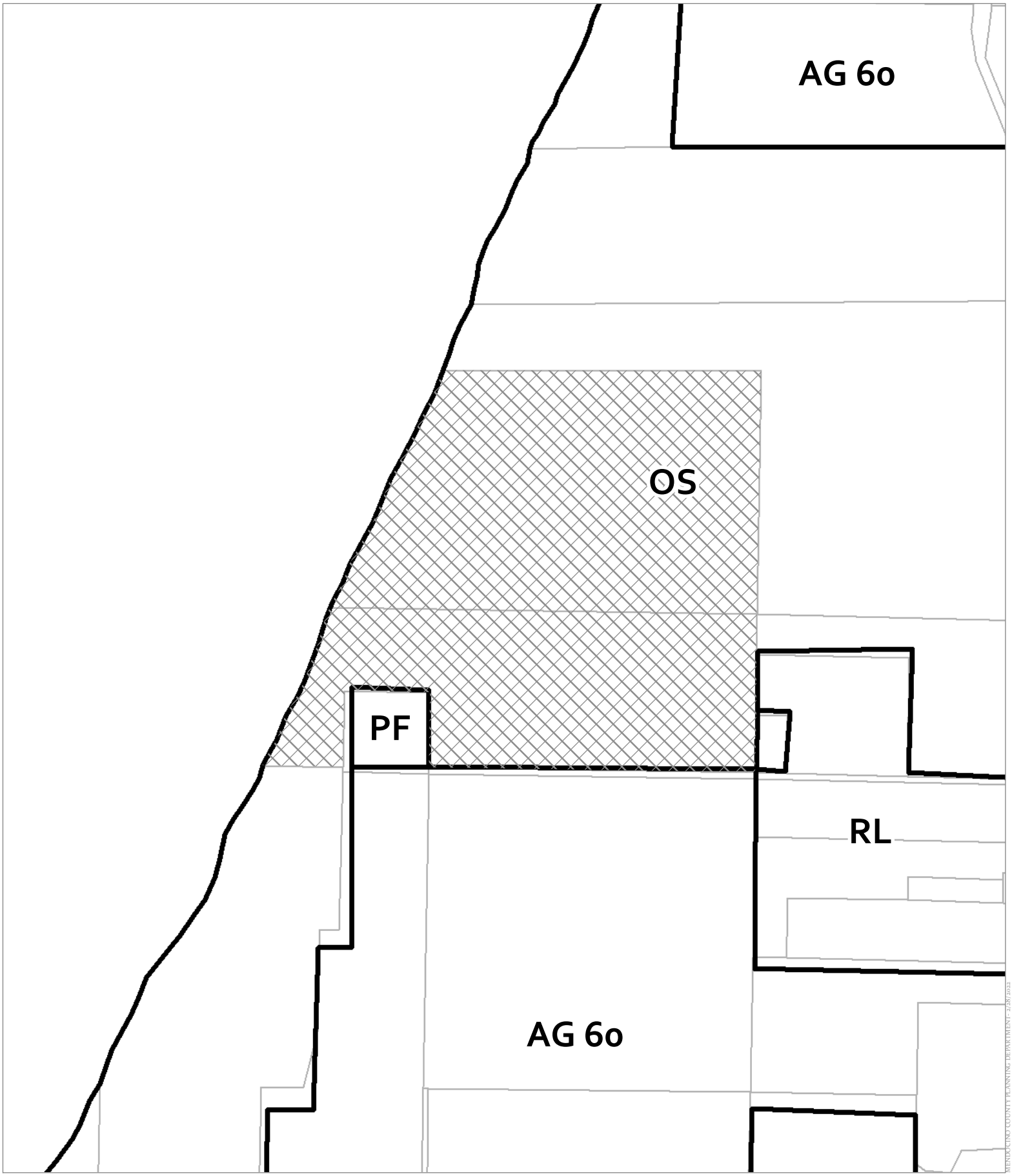

CASE: CDP 2022-0007
OWNER: State of California
APN: 133-010-03, 132-190-02
APLCT: Brian Dewey
AGENT: Joel Bonilla
ADDRESS: None, Manchester

Zoning Districts

0 500 1,000 Feet
0 0.075 0.15 Miles
1:12,000

ZONING DISPLAY MAP

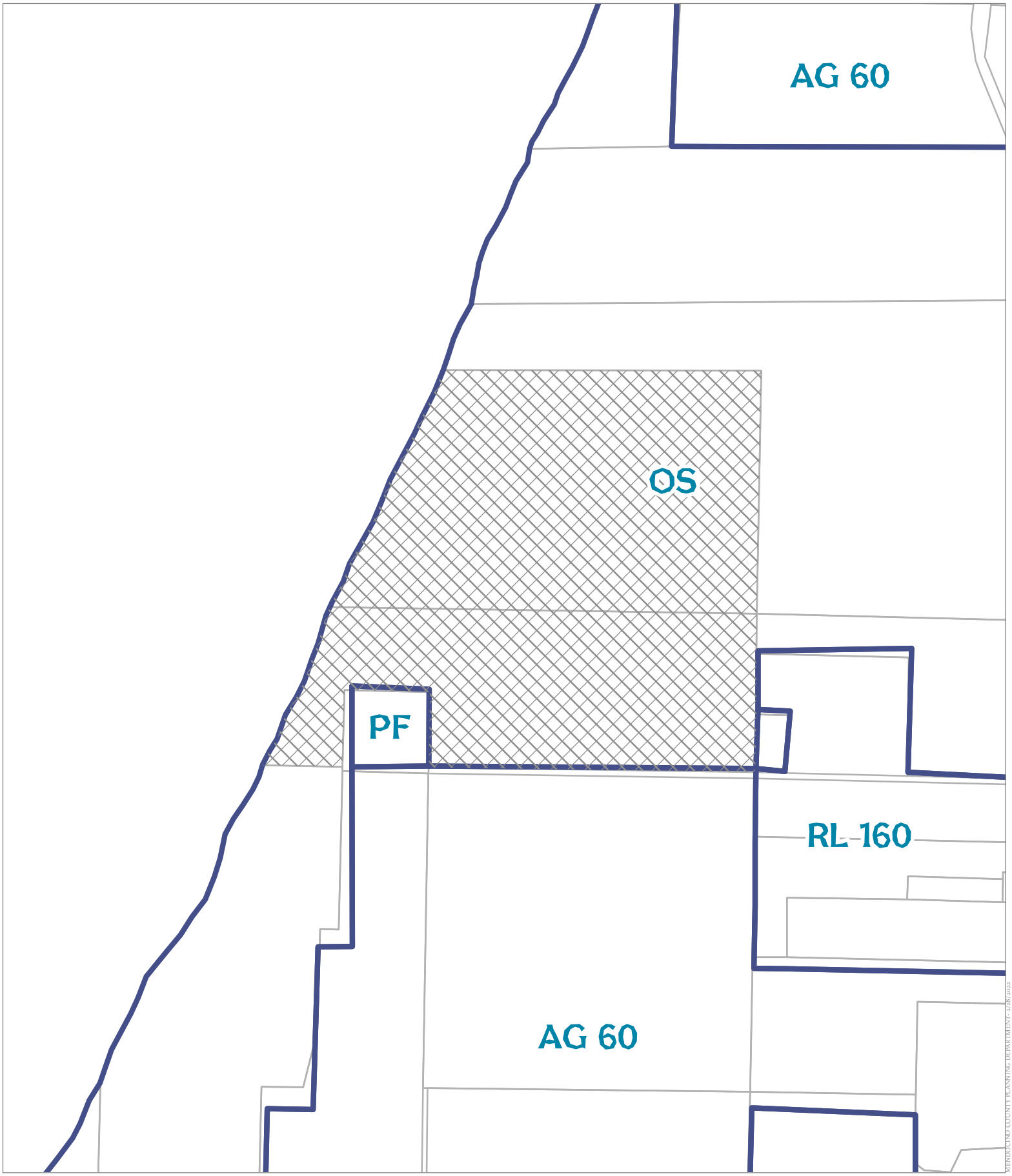

General Plan Classes

0 500 1,000 Feet
0 0.075 0.15 Miles
1:12,000

CASE: CDP 2022-0007
OWNER: State of California
APN: 133-010-03, 132-190-02
APLCT: Brian Dewey
AGENT: Joel Bonilla
ADDRESS: None, Manchester

GENERAL PLAN CLASSIFICATIONS

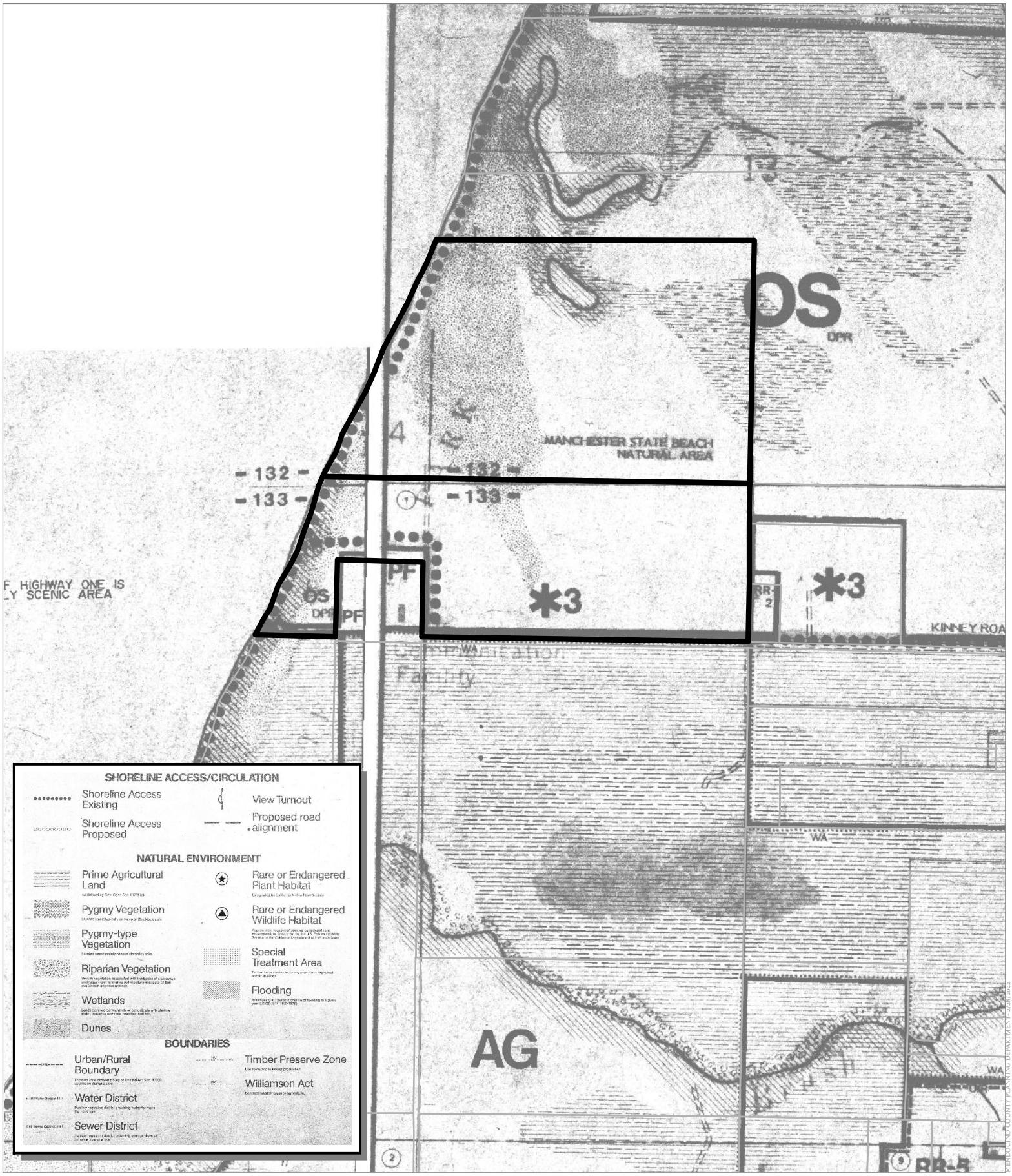

CASE: CDP 2022-0007
OWNER: State of California
APN: 133-010-03, 132-190-02
APLCT: Brian Dewey
AGENT: Joel Bonilla
ADDRESS: None, Manchester

0 500 1,000 Feet
0 0.075 0.15 Miles
1:12,000

LCP LAND USE MAPS 24 (MANCHESTER BEACH) & 23 (MANCHESTER)

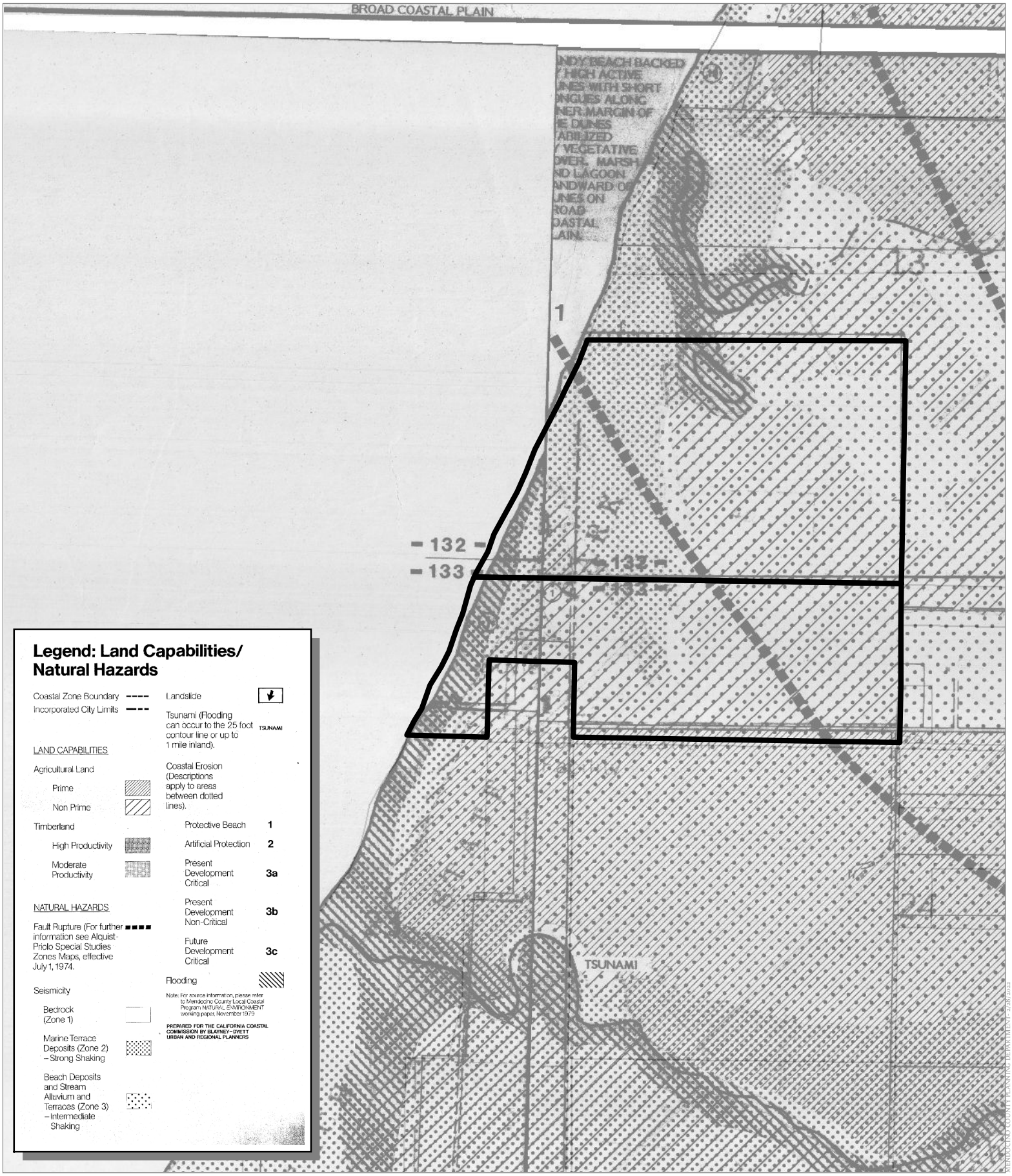

CASE: CDP 2022-0007
OWNER: State of California
APN: 133-010-03, 132-190-02
APLCT: Brian Dewey
AGENT: Joel Bonilla
ADDRESS: None, Manchester

0 500 1,000 Feet
0 0.075 0.15 Miles
1:12,000

LCP LAND CAPABILITIES & NATURAL HAZARDS

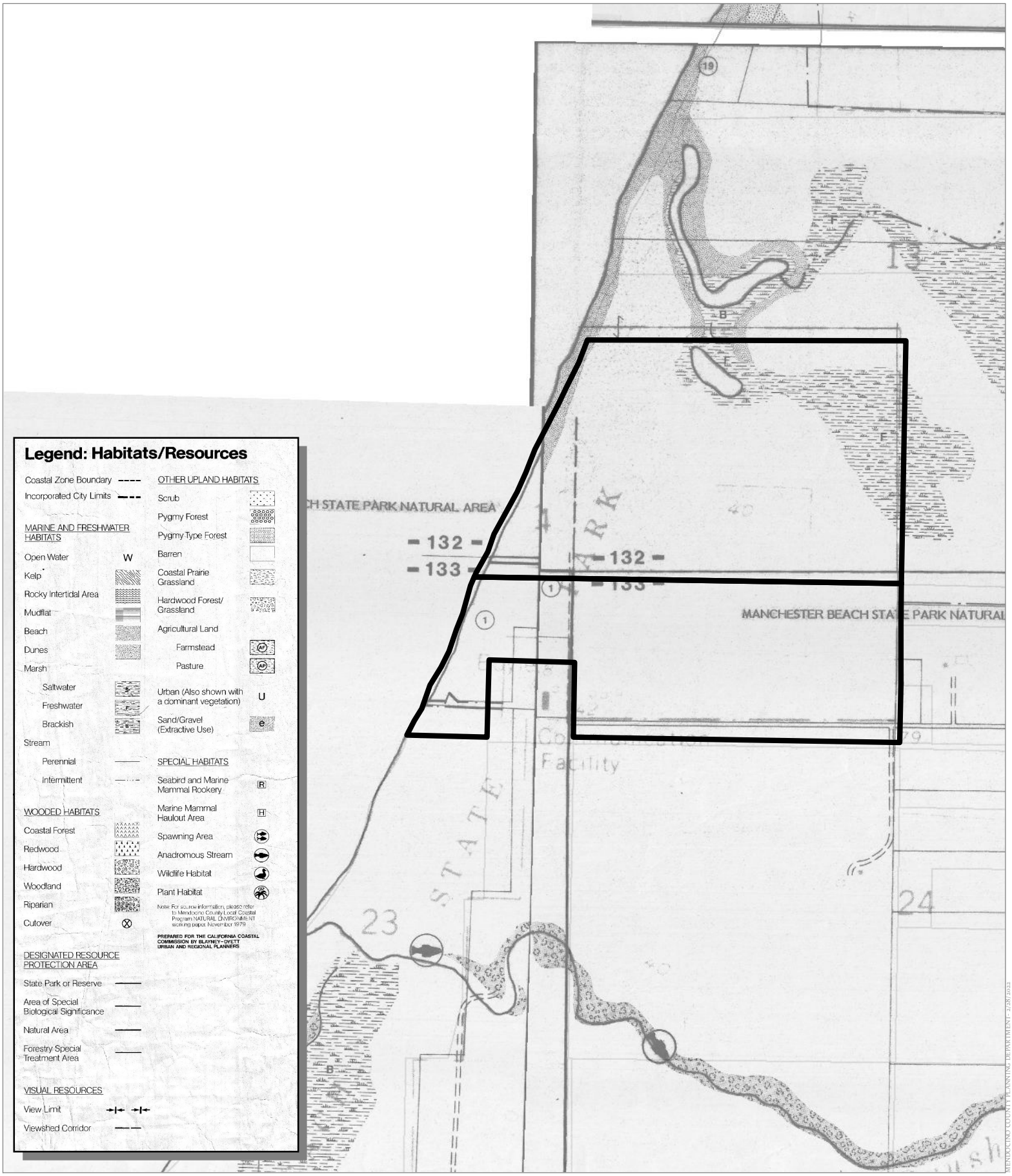

CASE: CDP 2022-0007
OWNER: State of California
APN: 133-010-03, 132-190-02
APLCT: Brian Dewey
AGENT: Joel Bonilla
ADDRESS: None, Manchester

0 500 1,000 Feet
0 0.075 0.15 Miles
1:12,000

LCP HABITATS & RESOURCES

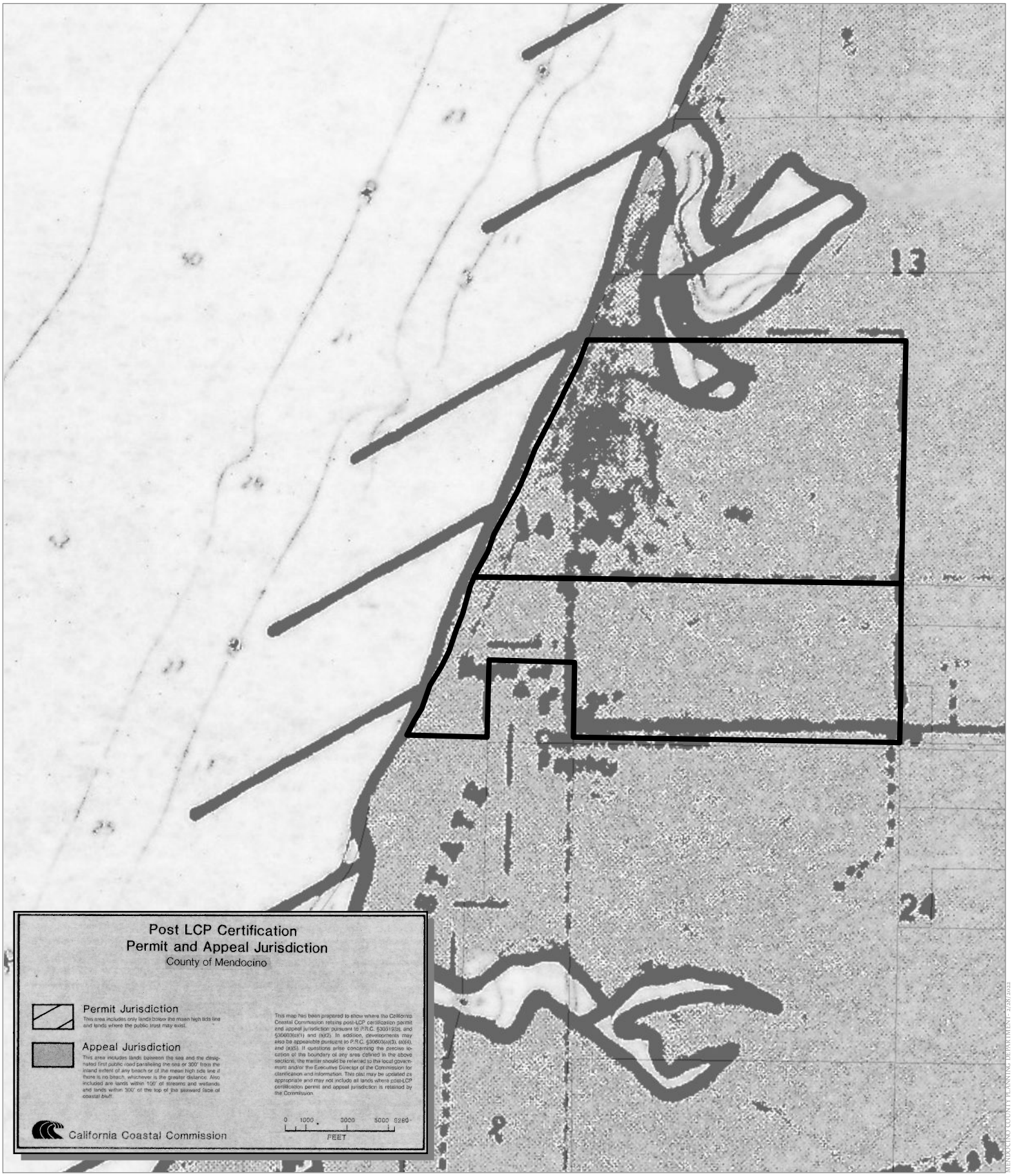

CASE: CDP 2022-0007
OWNER: State of California
APN: 133-010-03, 132-190-02
APLCT: Brian Dewey
AGENT: Joel Bonilla
ADDRESS: None, Manchester

0 500 1,000 Feet
0 0.075 0.15 Miles
N W E S
1:12,000

POST LCP CERTIFICATION & APPEAL JURISDICTION

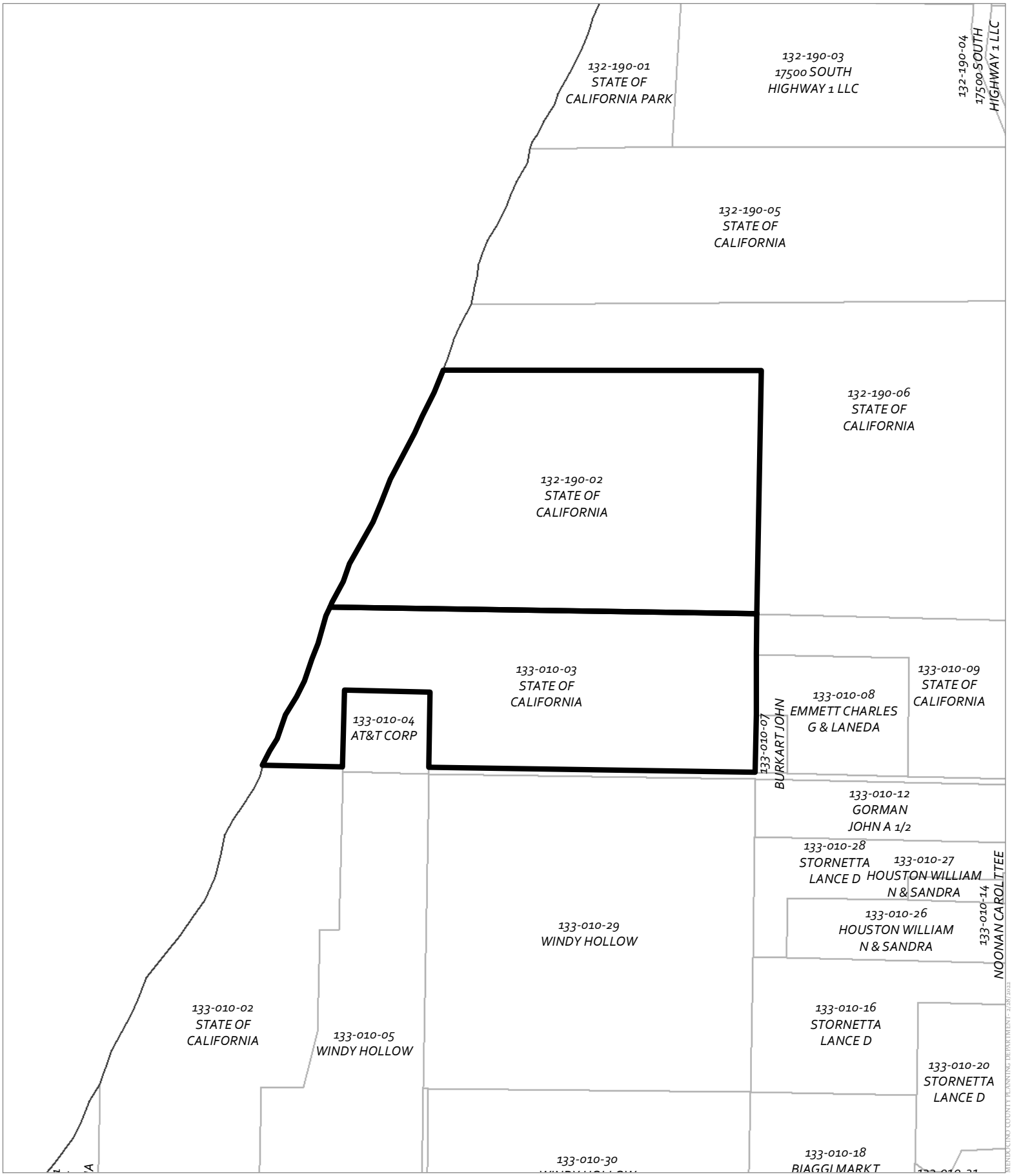

CASE: CDP 2022-0007
OWNER: State of California
APN: 133-010-03, 132-190-02
APLCT: Brian Dewey
AGENT: Joel Bonilla
ADDRESS: None, Manchester

0 500 1,000 Feet
0 0.075 0.15 Miles
1:12,000

ADJACENT PARCELS

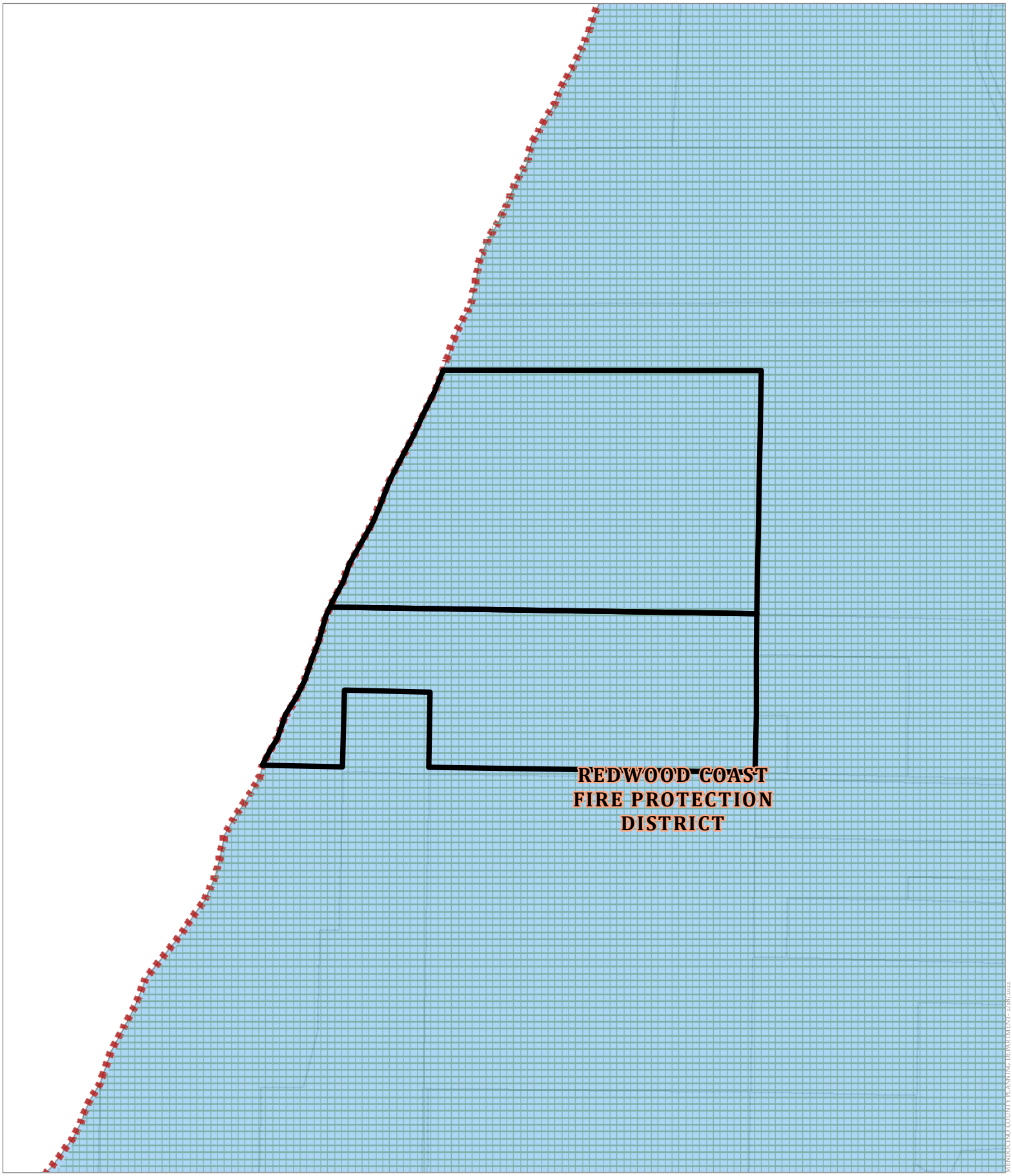

CASE: CDP 2022-0007
OWNER: State of California
APN: 133-010-03, 132-190-02
APLCT: Brian Dewey
AGENT: Joel Bonilla
ADDRESS: None, Manchester

Moderate Fire Hazard

County Fire Districts

0 500 1,000 Feet

0 0.075 0.15 Miles

1:12,000

FIRE HAZARD ZONES & RESPONSIBILITY AREAS

STATE RESPONSIBILITY AREA

MENDOCINO COUNTY PLANNING DEPARTMENT 2/28/2022

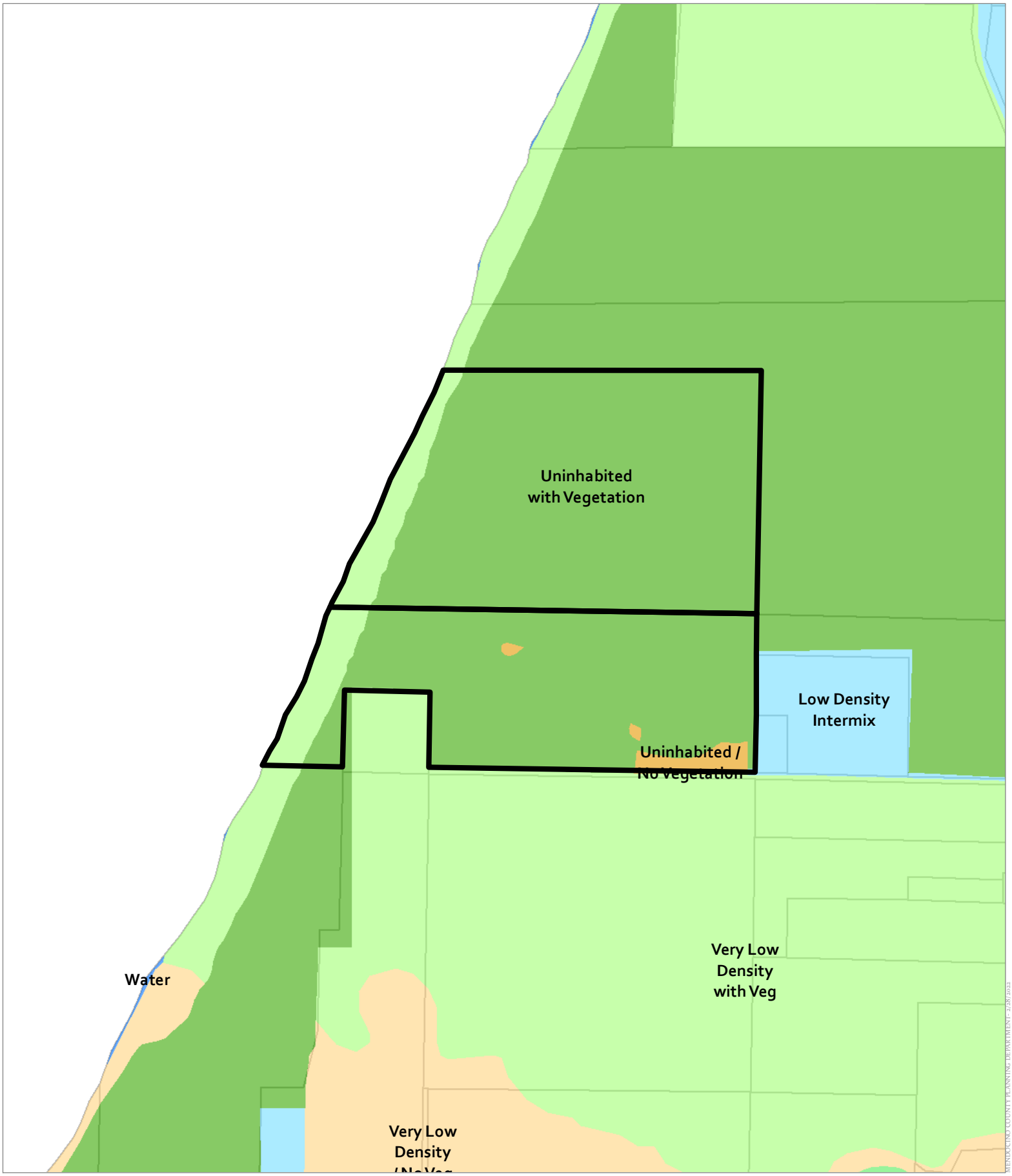

CASE: CDP 2022-0007
OWNER: State of California
APN: 133-010-03, 132-190-02
APLCT: Brian Dewey
AGENT: Joel Bonilla
ADDRESS: None, Manchester

0 500 1,000 Feet
0 0.075 0.15 Miles
1:12,000

WILDLAND-URBAN INTERFACE ZONES

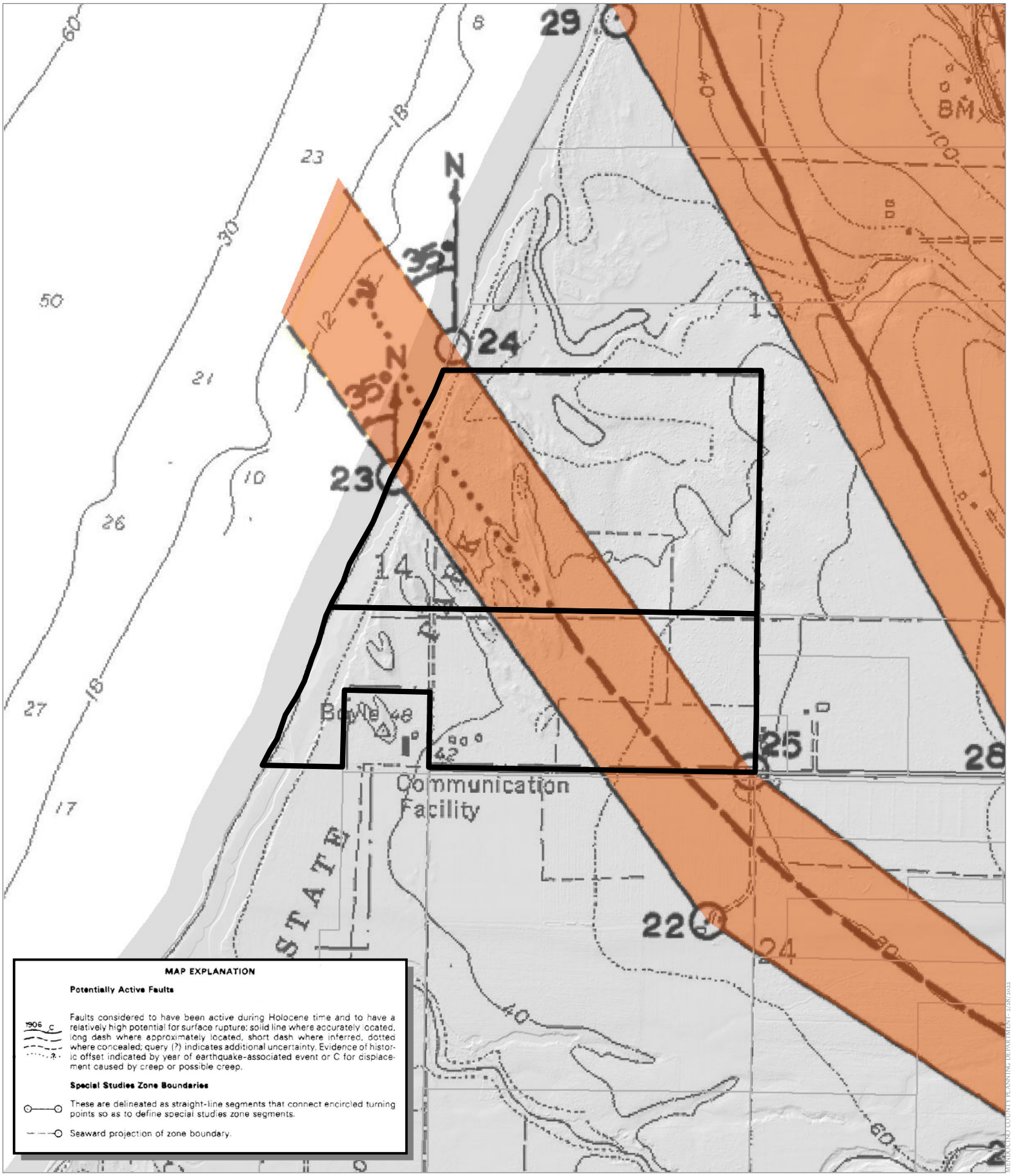

CASE: CDP 2022-0007
OWNER: State of California
APN: 133-010-03, 132-190-02
APLCT: Brian Dewey
AGENT: Joel Bonilla
ADDRESS: None, Manchester

San Andreas Fault Zone

0 500 1,000 Feet
0 0.075 0.15 Miles
1:12,000

EARTHQUAKE FAULT ZONES

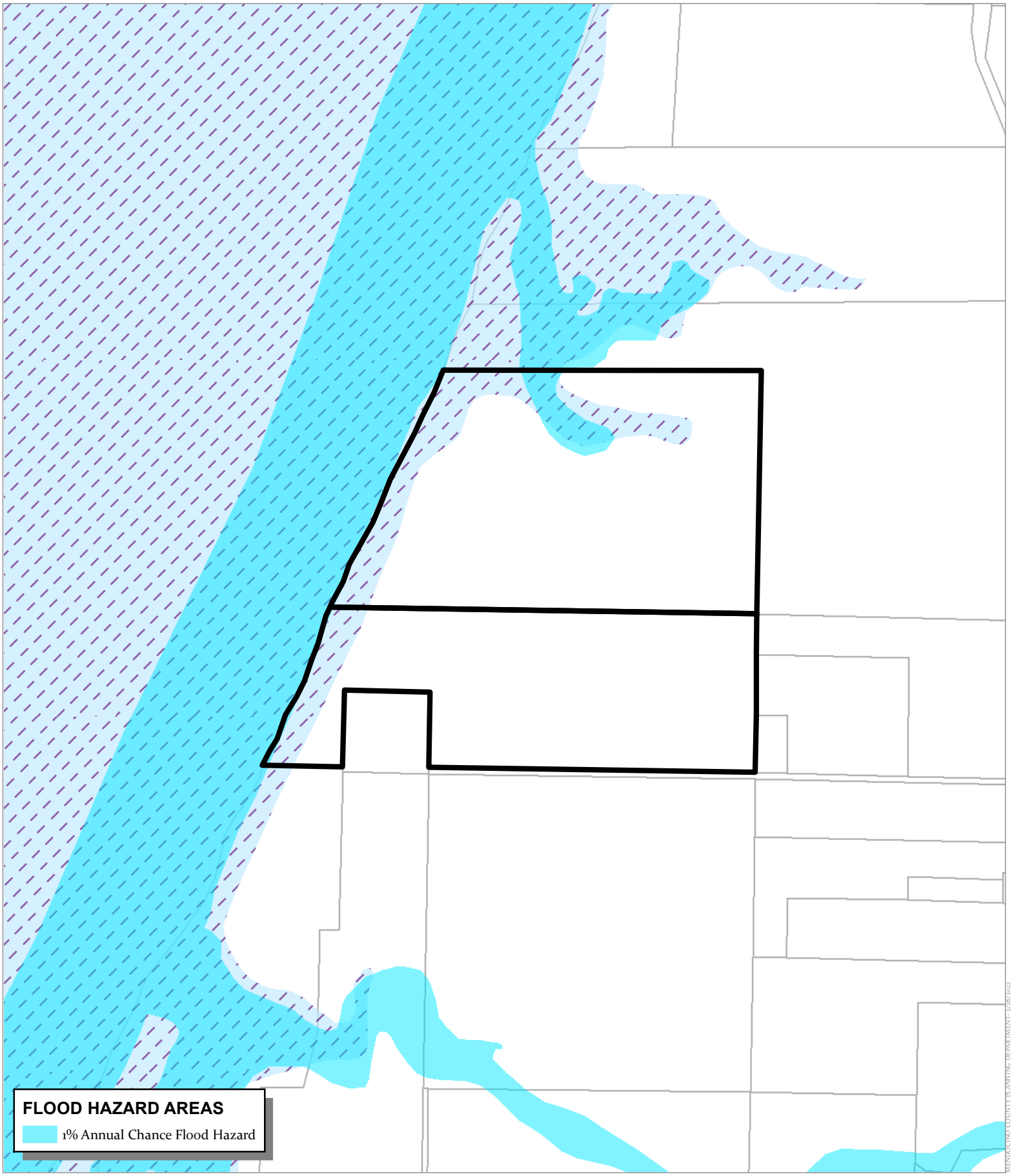

CASE: CDP 2022-0007
OWNER: State of California
APN: 133-010-03, 132-190-02
APLCT: Brian Dewey
AGENT: Joel Bonilla
ADDRESS: None, Manchester

Tsunami Inundation Zones

0 500 1,000 Feet
0 0.075 0.15 Miles
1:12,000

SPECIAL FLOOD HAZARD AREAS

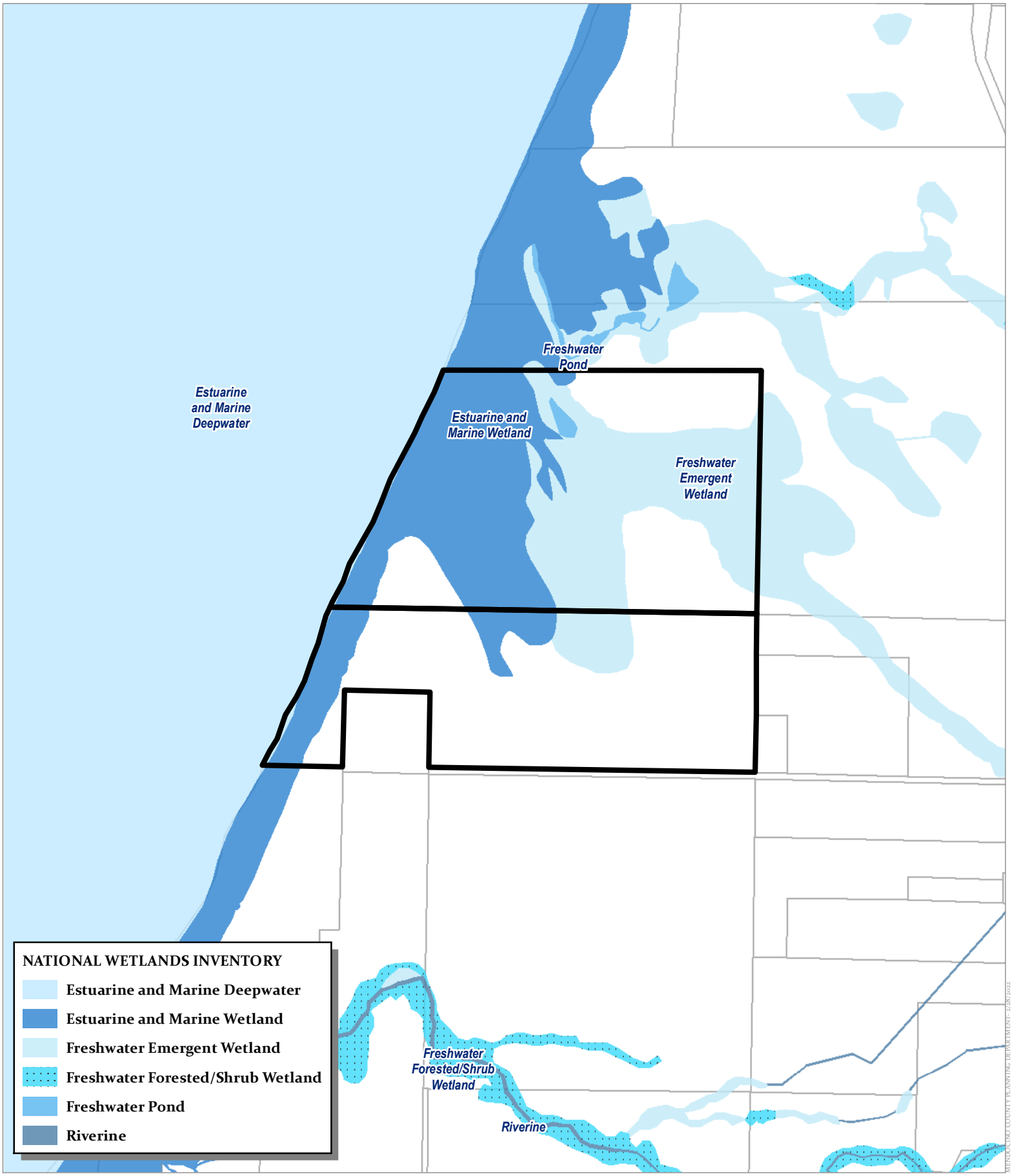

CASE: CDP 2022-0007
OWNER: State of California
APN: 133-010-03, 132-190-02
APLCT: Brian Dewey
AGENT: Joel Bonilla
ADDRESS: None, Manchester

0 500 1,000 Feet
0 0.075 0.15 Miles
1:12,000

WETLANDS

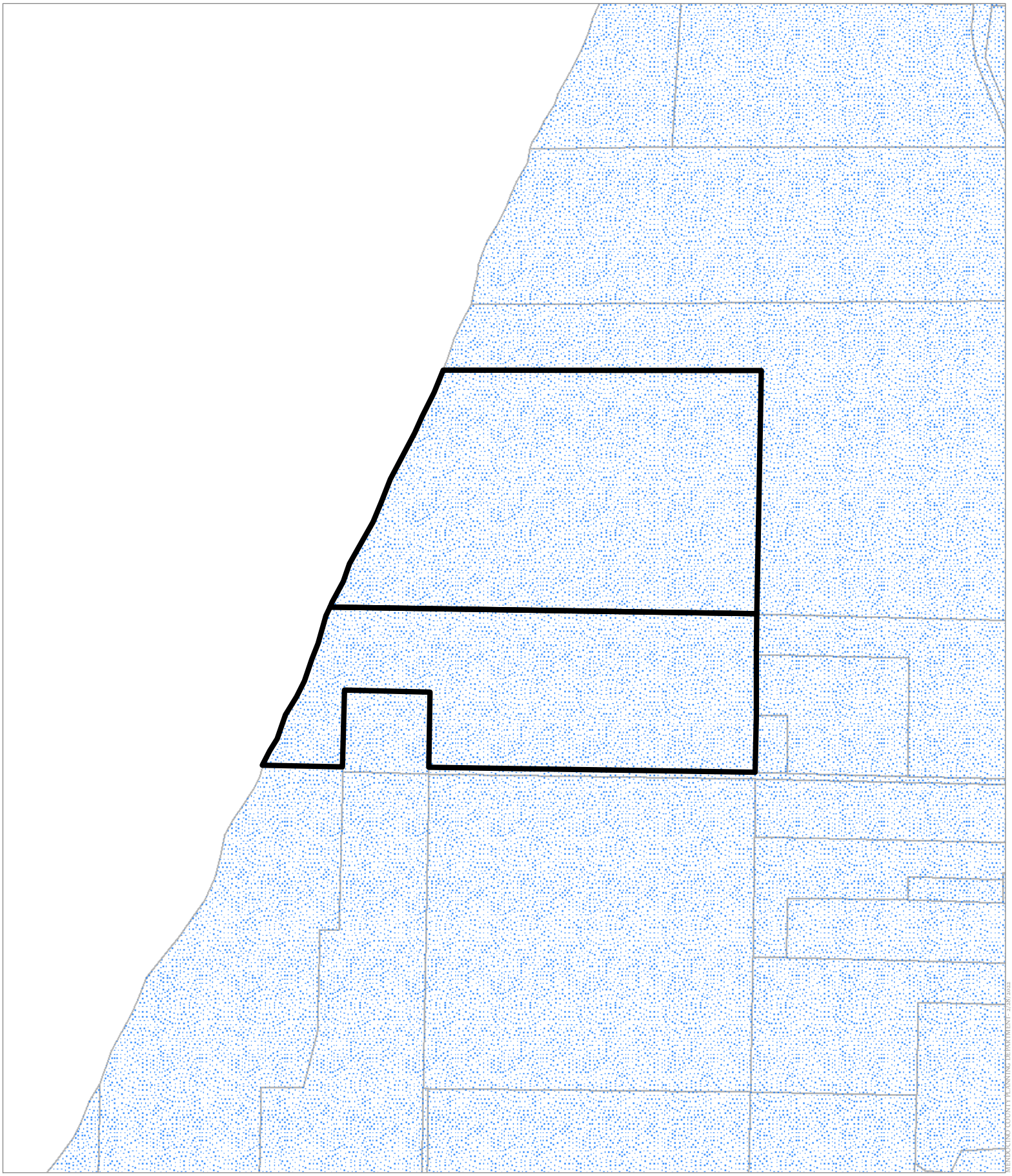

CASE: CDP 2022-0007
OWNER: State of California
APN: 133-010-03, 132-190-02
APLCT: Brian Dewey
AGENT: Joel Bonilla
ADDRESS: None, Manchester

Sufficient Water Resources

0 500 1,000 Feet
0 0.075 0.15 Miles
1:12,000

GROUND WATER RESOURCES

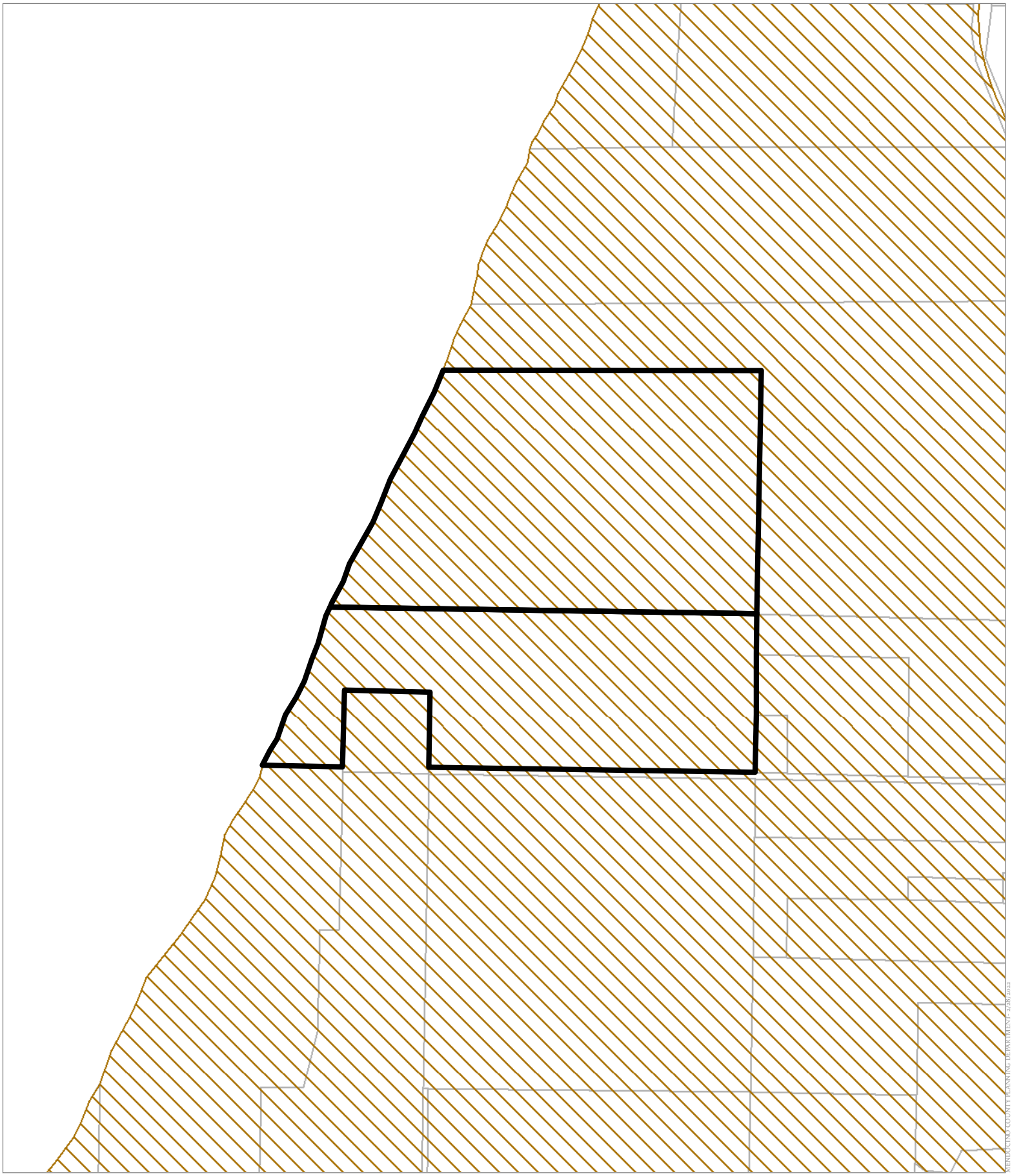

CASE: CDP 2022-0007
OWNER: State of California
APN: 133-010-03, 132-190-02
APLCT: Brian Dewey
AGENT: Joel Bonilla
ADDRESS: None, Manchester

Highly Scenic Area

0 500 1,000 Feet
0 0.075 0.15 Miles
1:12,000

HIGHLY SCENIC & TREE REMOVAL AREAS

CASE: CDP 2022-0007
OWNER: State of California
APN: 133-010-03, 132-190-02
APLCT: Brian Dewey
AGENT: Joel Bonilla
ADDRESS: None, Manchester

0° - 14°
15° - 32°
33° - 72°

0 500 1,000 Feet
0 0.075 0.15 Miles
1:12,000

ESTIMATED SLOPE

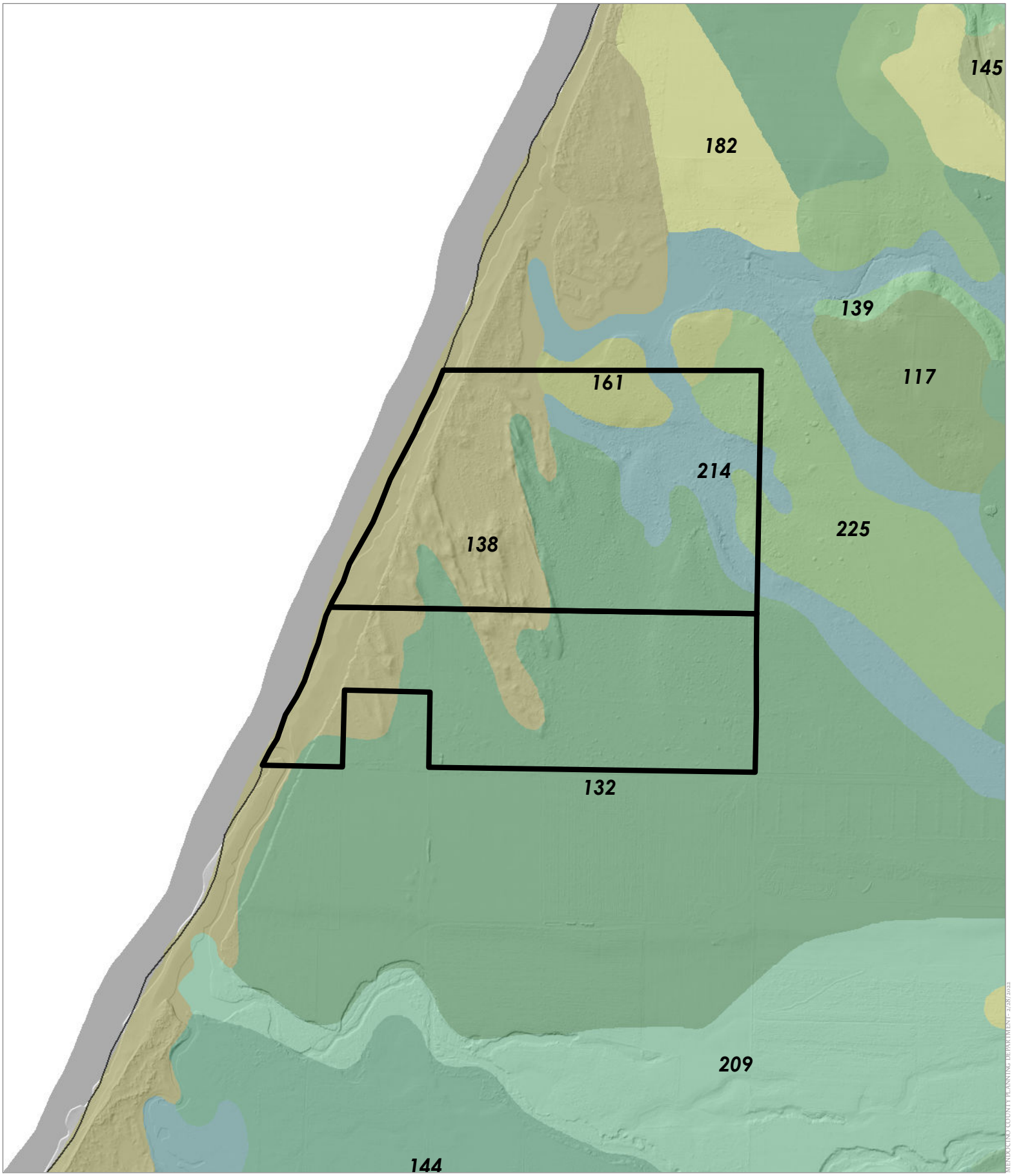

CASE: CDP 2022-0007
OWNER: State of California
APN: 133-010-03, 132-190-02
APLCT: Brian Dewey
AGENT: Joel Bonilla
ADDRESS: None, Manchester

Bishop Pine

0 500 1,000 Feet
0 0.075 0.15 Miles
1:12,000

WESTERN SOIL CLASSES

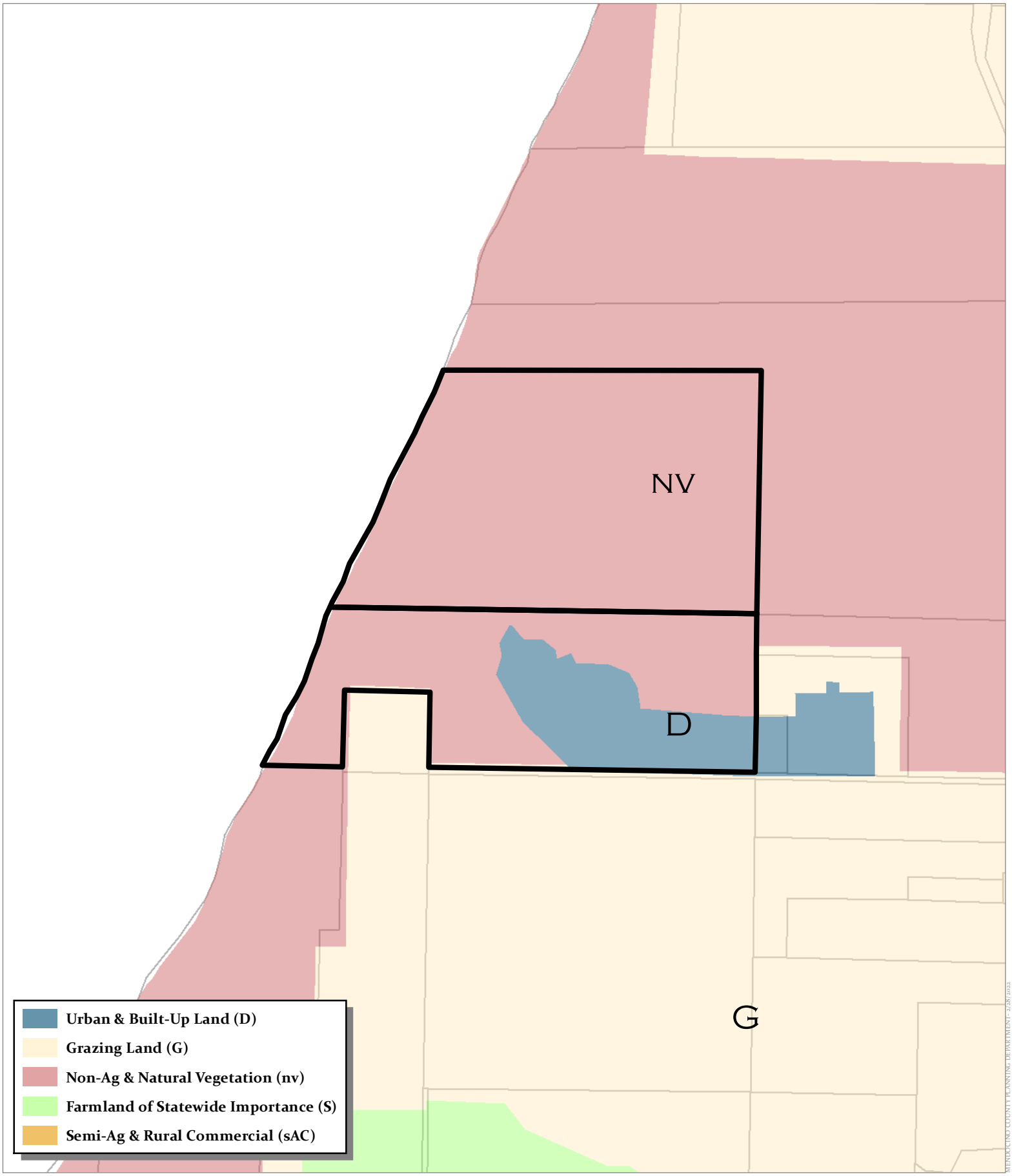

CASE: CDP 2022-0007
OWNER: State of California
APN: 133-010-03, 132-190-02
APLCT: Brian Dewey
AGENT: Joel Bonilla
ADDRESS: None, Manchester

0 500 1,000 Feet
0 0.075 0.15 Miles
1:12,000

FARMLAND CLASSIFICATIONS